Data sheet

SP063xxVGNN ASP063

P/N
ASP063xx06
xx=number of poles
2026/11/16
Version: X

Illustrations

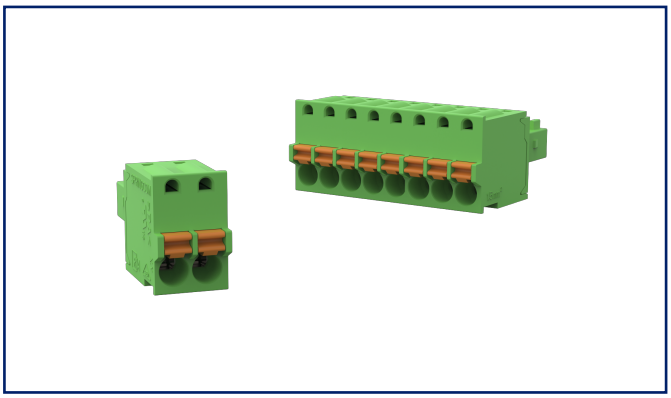

Dimensional drawing as an example

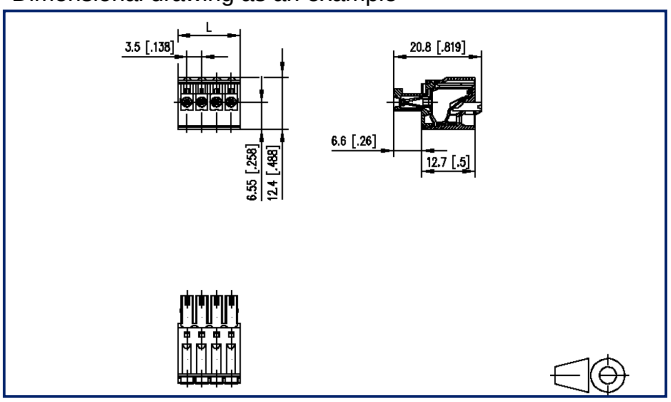

See enlarged drawings at the end of document

Product specification

- spring clamp terminal block, pluggable
- centerline 3.50 mm, direction of connection vertical 0°
- color green
- push-button, wire entry uncodeable side parallel to plug direction

© 2026 METZ CONNECT - Technische Änderungen vorbehalten! Subject to modifications! Sous réserve de modifications techniques!

METZ CONNECT GmbH | Im Tal 2 | 78176 Blumberg | Germany
Phone +49 7702 533-0 | Fax +49 7702 533-433 | info@metz-connect.com

P/N
ASP063xx06
xx=number of poles
2026/11/16
Version: X

Technical Data

General Data			
Insulating material class	CTI 600		
clearance/creepage dist.	1.9 mm		
Protection category	IP20		
Insul. strip length	9 mm		
Rated current	8 A		
Overvoltage category	III	III	II
Pollution degree	3	2	2
Rated voltage	50 V	250 V	250 V
Rated test voltage	2.5 kV	2.5 kV	2.5 kV
Terminal data			
rat.wiring solid AWGmax	0.08 mm² - 1.5 mm² / AWG 28 - AWG 16		
rat.wiring strand.AWGmax	0.08 mm² - 1.5 mm² / AWG 28 - AWG 16		
Approvals			
c UL us V / A / AWG	150 / 8 / 28 - 16		
approval UL - File No.	E121004		
SEV	130 V / 2.5 kV / 8 A		
Material			
insulating material	PA66		
flammability class	V0		
spring material	Spring steel		
contact material	CuSn		
Contact surface	Sn		
Glow-Wire Flammability GWFI	960 °C acc. to IEC 60695-2-12		
Glow-Wire Flammability GWIT	775 °C acc. to IEC 60695-2-13		
Climatic Data			
upper limit temperature	105 °C		
lower limit temperature	-40 °C		
general			
Tolerance	ISO 2768 -mH		
Application note			

© 2026 METZ CONNECT - Technische Änderungen vorbehalten! Subject to modifications! Sous réserve de modifications techniques!

Technical Data

This product is a standard product of METZ CONNECT. METZ CONNECT is not aware of the specific intended use of the goods by the Customer or any customers of the Customer. The Customer guarantees that it has fully and sufficiently tested the use of the goods and any product modifications, product changes or product enhancements with regard to the specific intended use in accordance with the state of the art or in any other way.

© 2026 METZ CONNECT - Technische Änderungen vorbehalten! Subject to modifications! Sous réserve de modifications techniques!

Counterpart

P/N	Designation
311881	PR043xxHBBN (Type 188)
311891	PR043xxVBBN Type 189
313421	PT093xxHBBN Type 342
313431	PT093xxVBBN Type 343

© 2026 METZ CONNECT - Technische Änderungen vorbehalten! Subject to modifications! Sous réserve de modifications techniques!

P/N
ASP063xx06
xx=number of poles
2026/11/16
Version: X

Illustrations

Dimensional drawing as an example

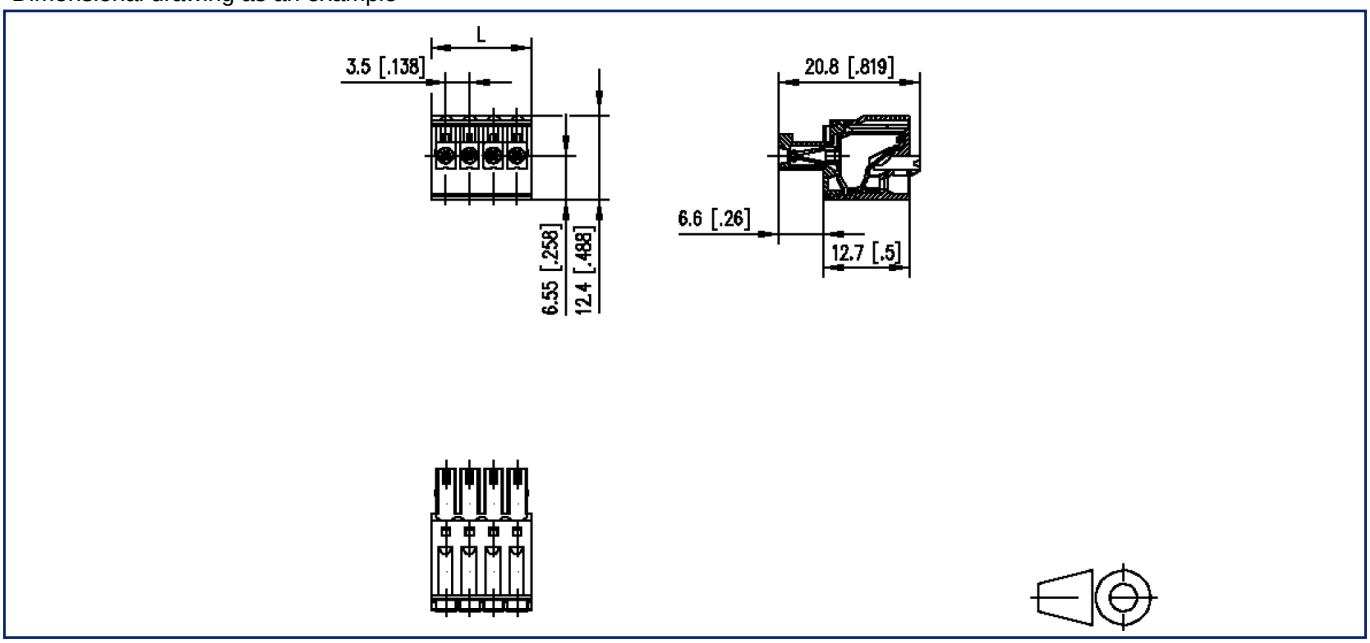

L=(pole size - 1) x centerline + 4.3 mm [0.169]

© 2026 METZ CONNECT - Technische Änderungen vorbehalten! Subject to modifications! Sous réserve de modifications techniques!