Data sheet

C6$_A$modul 12 port 180°M GB3 pearl white

P/N
130B11SA0301-E
EAN 4250184131854
2026/02/19
Version: AI

Illustrations

Dimensional drawing

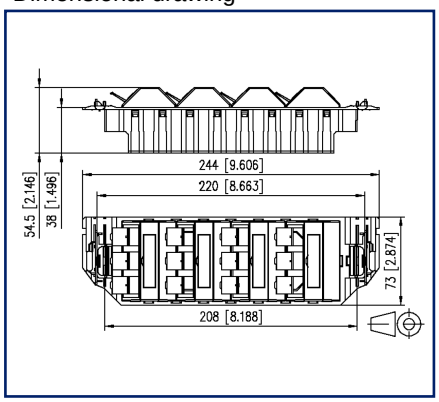

Cut-out

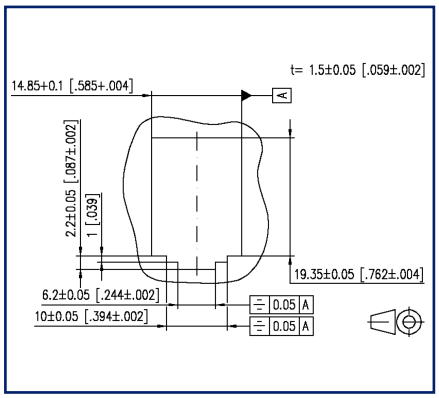

See enlarged drawings at the end of document

Product specification

- termination unit for mounting in service outlets for underfloor systems
- suitable for underfloor service outlets of OBO Bettermann (Ackermann) and some types of :hager (Electraplan Solutions)
- GB3 design, with C6$_A$modul 180°
- certified to GHMT Cat.6$_A$ re-embedded PVP
- Cat.6$_A$ component test according to ISO/IEC 11801, DIN EN 50173-1, ANSI/TIA-568.2-D and IEC 60603-7-51, GHMT certified
- compliance with class E$_A$ up to 500 MHz according to ISO/IEC 11801, DIN EN 50173-1
- tested: component up to 600 MHz, link up to 800 MHz
- suitable for 10 GBit Ethernet (IEEE 802.3an), Remote Powering (PoE, PoE plus, UPoE and 4PPoE) and HDBaseT
- connection of data lines AWG 26/1 to 22/1 (solid wire) and AWG 26/7 to 22/7 (stranded wire) to insulation displacement connectors (IDC)
- migration to 25G-systems without special tools
- incl. module frame, caps and dummy covers
- module plug direction 45° upwards
- with label window for enclosed identification labels
- label sheet 209 x 294 mm see accessory
- integrated dust protection covers (also colored)
- color: black device casing, pearl white covers
- variants: 3 ports, 6 ports, 9 ports, 12 ports

© 2026 METZ CONNECT - Technische Änderungen vorbehalten! Subject to modifications! Sous réserve de modifications techniques!

Data sheet

C6$_A$modul 12 port 180°M GB3 pearl white

P/N
130B11SA0301-E
EAN 4250184131854
2026/02/19
Version: AI

Technical Data

General Data	
Fields of application	office areas
Mechanical measurement according to MICE	M1
Ingress measurement according to MICE	I1
Climatic measurement according to MICE	C1
Electromagnetic measurement according to MICE	E2
Design	wall outlet
Mounting style	GB3
Shielding	shielded
Transmission technology	Copper
Color	pearl white RAL 1013
Dimensions	
Dimension (L x W x H)	54.5 mm x 73 mm x 244 mm
Dimension (L x W x H)	2.146 in. x 2.874 in. x 9.606 in.
Modularity	yes
Labeling option	label window with identification label
Marking option	by dust protection

Transmission characteristics	
Category (ISO)	6$_A$
Class (ISO/IEC)	E$_A$
Category (TIA)	6A
Remote Powering	yes
PoE	IEEE 802.3af
PoE plus	IEEE 802.3at
UPoE	yes
HDBaseT	yes
Transmission rate up to 10 GBit	IEEE 802.3an

© 2026 METZ CONNECT - Technische Änderungen vorbehalten! Subject to modifications! Sous réserve de modifications techniques!

Data sheet

C6$_A$modul 12 port 180°M GB3 pearl white

P/N
130B11SA0301-E
EAN 4250184131854
2026/02/19
Version: AI

Technical Data

Connections/interfaces	
Connector technology interface 1	IDC-connection
Connector technology interface 2	RJ45-jack
Number of ports interface 2	12
Number of ports interface 2 equipped	12
Number of positions/contacts interface 1	12 x 8
Number of positions/contacts interface 2	12 x 8P/8C
Termination data, solid wire (min. - max.)	
Conductor cross section, solid wire	AWG 26/1 - AWG 22/1
Conductor cross section, solid wire	0.128 mm² - 0.324 mm²
Conductor diameter, solid wire (bare copper)	0.409 mm - 0.643 mm
Conductor diameter, solid wire (bare copper)	0.016 in. - 0.025 in.
Termination data, stranded wire (min. - max.)	
Conductor cross section, stranded wire	AWG 26/7 - AWG 22/7
Conductor cross section, stranded wire	0.141 mm² - 0.355 mm²
Conductor diameter, stranded wire (bare copper)	0.483 mm - 0.762 mm
Conductor diameter, stranded wire (bare copper)	0.019 in. - 0.03 in.
Module plug-in direction	45° upwards
Cable access/outlet	180°
Electrical/ optical properties	
Current carrying capacity	max. 1 A
Rated voltage	max. 50 V
Contact resistance	max. 20 mOhm
Through resistance	max. 200 mOhm
Insulation resistance	min. 500 MOhm
Dielectric strength conductor-conductor (secondary)	max. 1000 V DC
Mechanical data	
Insertion and withdrawal force	max. 30 N
Life - Number of mating cycles	min. 1000
Position/mounting of latch standard installation position	top

© 2026 METZ CONNECT - Technische Änderungen vorbehalten! Subject to modifications! Sous réserve de modifications techniques!

Data sheet

C6$_A$modul 12 port 180°M GB3 pearl white

P/N
130B11SA0301-E
EAN 4250184131854
2026/02/19
Version: AI

Technical Data

Materials and material properties	
Material - Housing	GD-Zn
Material - Cover part(s)	ABS
Material - Supporting frame	GD-Zn
Material - Label window	ABS, transparent
Material - Dust protection	ABS
Material - Contact	Spring steel
Material - Contact finish	Au (gold)
Material - Shield	GD-Zn
Material - Stuffer cap	PA 6.6 UL94 V0
Material - Finish	Ni (nickel)
Material - Strain relief	PA 6.6 UL94 V0
RoHS	compliant

Environmental conditions	
Temperature (min. - max.)	
Temperature - Storage °C	-40 °C - 70 °C
Temperature - Storage °F	-40 °F - 158 °F
Temperature - Operating °C	-40 °C - 70 °C
Temperature - Operating °F	-40 °F - 158 °F
Rapid change of temperature	-40°C / -40°F - +70°C / 158°F / 25 cycles t=30 min

Certifications		
GHMT PVP		yes

Standards/Regulations	
Generic cabling systems	
General requirements	ANSI/TIA-568
Connectors for electronic equipment	
Free and fixed connectors	DIN EN 60603-7-51:2011-01

© 2026 METZ CONNECT - Technische Änderungen vorbehalten! Subject to modifications! Sous réserve de modifications techniques!

Data sheet

$C6_A$modul 12 port 180°M GB3 pearl white

P/N
130B11SA0301-E
EAN 4250184131854
2026/02/19
Version: AI

Technical Data

Standards/Regulations

Connectors for electronic equipment - Tests and measurements	
Test standard for connectors (engaging and separating connectors under electrical load)	DIN-EN 60512-99-001, DIN-EN 60512-99-002
Endurance tests	IEC 60512-9-3: 03-2009
Interference proof	
Immunity for industrial environments	DIN EN 61000-6-2:2006-03
Climate tests	IEC 60512-11

Classifications

ETIM 7.0	EC001264
ETIM 8.0	EC001264
ETIM 9.0	EC001264
ETIM 10.0	EC001264

Packing details

Type of packaging	1 pc(s) / plastic bag

Application note

This product is a standard product of METZ CONNECT. METZ CONNECT is not aware of the specific intended use of the goods by the Customer or any customers of the Customer. The Customer guarantees that it has fully and sufficiently tested the use of the goods and any product modifications, product changes or product enhancements with regard to the specific intended use in accordance with the state of the art or in any other way. At METZ CONNECT's request, the Customer shall submit and make available meaningful evidence (e.g. test and laboratory protocols, certifications, etc.).

© 2026 METZ CONNECT - Technische Änderungen vorbehalten! Subject to modifications! Sous réserve de modifications techniques!

Data sheet

C6$_A$modul 12 port 180°M GB3 pearl white

P/N
130B11SA0301-E
EAN 4250184131854
2026/02/19
Version: AI

Accessories

P/N	Designation
1309310099-I	GB fastening kit PUK
1309320001-I	Subway blind cover
1309320301-E	Subway 3 port cover
1309330300-E	Subway 3 port module frame
1309380101-I	Subway DIN device frame
816979-0103-I	Dust protection covers for Modul patch panels subway / REG gray
816979-0105-I	Dust protection covers for Modul patch panels subway / REG yellow
816979-0106-I	Dust protection covers for Modul patch panels subway / REG blue
816979-0107-I	Dust protection covers for Modul patch panels subway / REG green
816979-0108-I	Dust protection covers for Modul patch panels subway / REG red
899650-01	Label sheet for wall outlets

© 2026 METZ CONNECT - Technische Änderungen vorbehalten! Subject to modifications! Sous réserve de modifications techniques!

Data sheet

C6$_A$modul 12 port 180°M GB3 pearl white

P/N
130B11SA0301-E
EAN 4250184131854
2026/02/19
Version: AI

Illustrations

Dimensional drawing

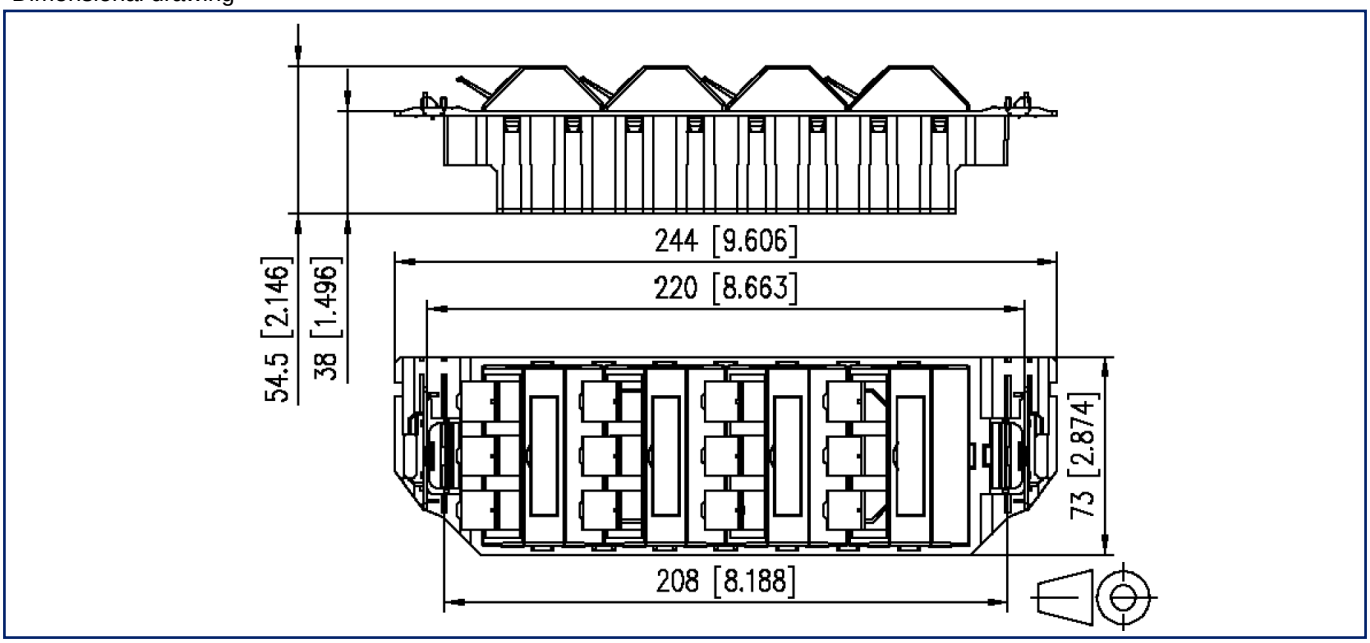

Cut-out

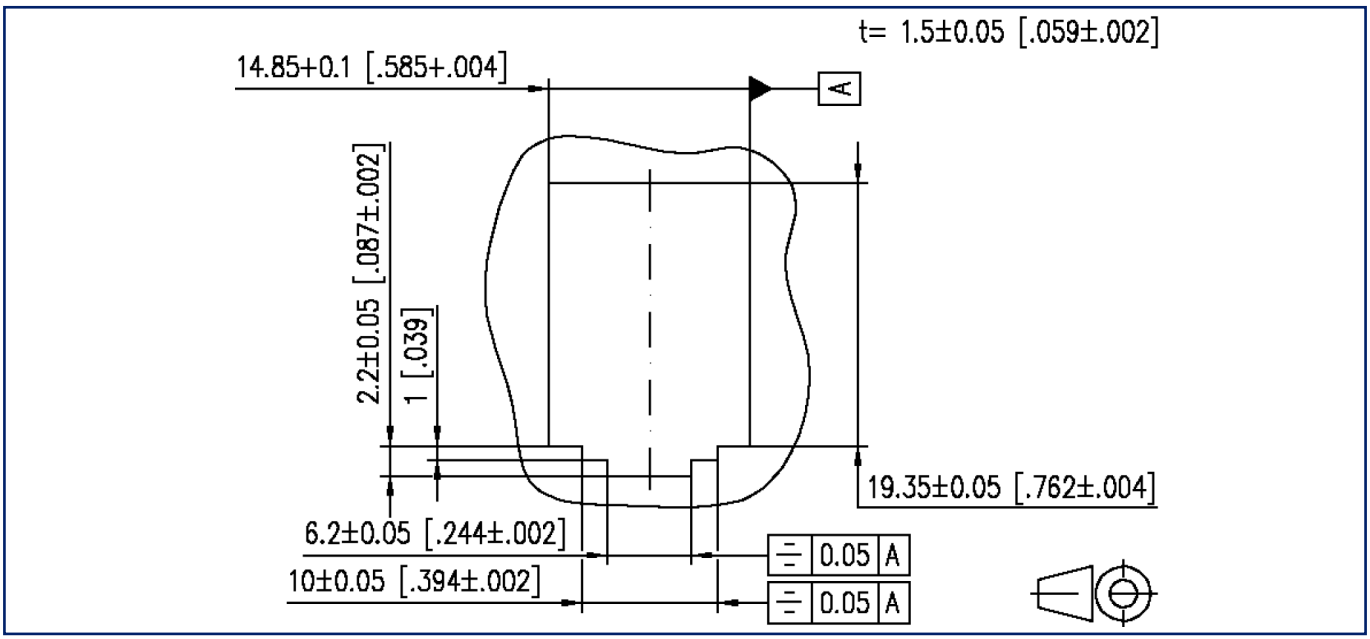

METZ CONNECT GmbH | Im Tal 2 | 78176 Blumberg | Germany
Phone +49 7702 533-0 | Fax +49 7702 533-433
Weitere Dokumentation siehe / additional documentation see / documentation supplémentaire voir www.metz-connect.com

© 2026 METZ CONNECT - Technische Änderungen vorbehalten! Subject to modifications! Sous réserve de modifications techniques!

Data sheet

C6$_A$modul 12 port 180°M GB3 pearl white

P/N
130B11SA0301-E
EAN 4250184131854
2026/02/19
Version: AI

Illustrations

Wiring diagram

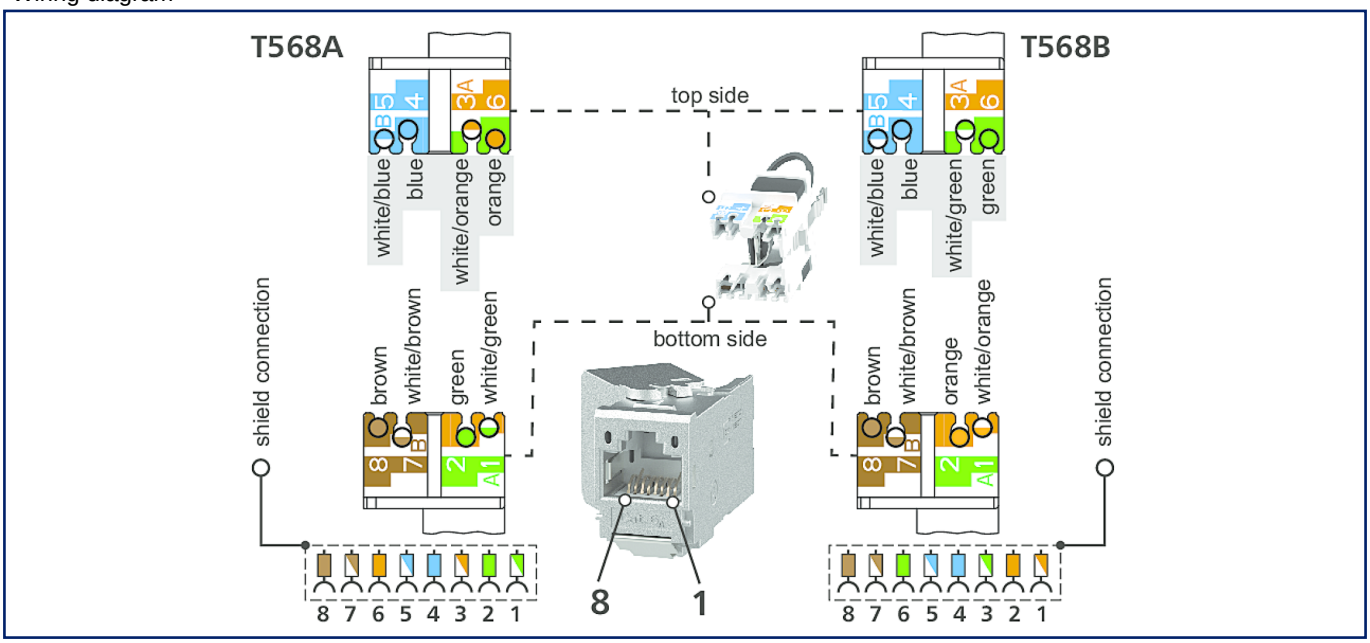

© 2026 METZ CONNECT - Technische Änderungen vorbehalten! Subject to modifications! Sous réserve de modifications techniques!