Data sheet

Modul wall outlet surface mounted flat 2 port unequipped pure white

P/N
1309150102-E
EAN 4250184111238
2025/09/17
Version: Z

Illustrations

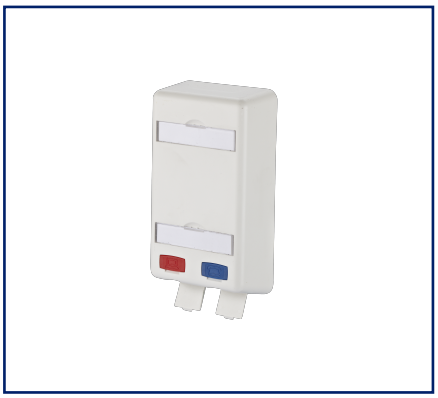

Dimensional drawing

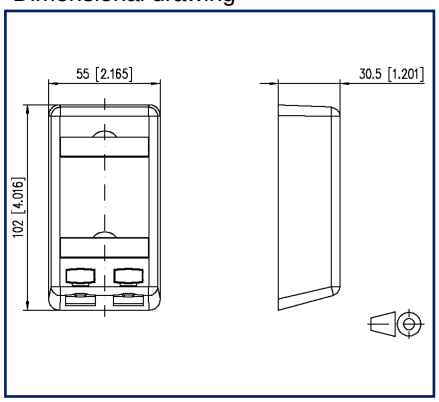

Cut-out

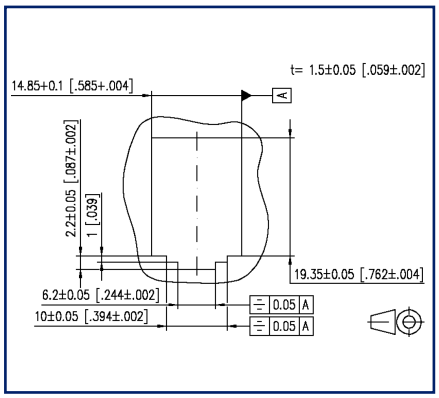

See enlarged drawings at the end of document

Product specification

- flat surface-mounted housing for two individual modules in Modul design (E-DAT modul, $C6_A$modul)
- label window for identification labels (labels included in the delivery)
- mounting in underfloor false floors
- colored coding of the ports (red/blue)
- ideal for implementing consolidation points

© 2025 METZ CONNECT - Technische Änderungen vorbehalten! Subject to modifications! Sous réserve de modifications techniques!

Data sheet

Modul wall outlet surface mounted flat 2 port unequipped pure white

P/N
1309150102-E
EAN 4250184111238
2025/09/17
Version: Z

Technical Data

General Data	
Fields of application	office areas
Mechanical measurement according to MICE	M1
Ingress measurement according to MICE	I1
Climatic measurement according to MICE	C1
Electromagnetic measurement according to MICE	E3
Design	wall outlet
Color	pure white - RAL 9010
Dimensions	
Dimension (L x W x H)	30.5 mm x 55 mm x 102 mm
Dimension (L x W x H)	1.201 in. x 2.165 in. x 4.016 in.
Modularity	yes
Labeling option	label window with identification label
Marking option	by port coding

Connections/interfaces	
Number of ports interface 2	2
Number of ports interface 2 equipped	0
Number of ports with dust protection interface 2	2
Module plug-in direction	straight downwards

Mechanical data	
Cut-out	MC module

Materials and material properties	
Material - Supporting frame	stainless steel
Material - Cover part(s)	ABS
Material - Label window	ABS, transparent
Material - Dust protection	ABS
Halogen free	yes
RoHS	compliant

© 2025 METZ CONNECT - Technische Änderungen vorbehalten! Subject to modifications! Sous réserve de modifications techniques!

Data sheet

Modul wall outlet surface mounted flat 2 port unequipped pure white

P/N
1309150102-E
EAN 4250184111238
2025/09/17
Version: Z

Technical Data

Classifications

ETIM 7.0	EC001264
ETIM 8.0	EC001264
ETIM 9.0	EC001264
ETIM 10.0	EC001264

Packing details

Type of packaging	1 pc(s) / box

Application note

This product is a standard product of METZ CONNECT. METZ CONNECT is not aware of the specific intended use of the goods by the Customer or any customers of the Customer. The Customer guarantees that it has fully and sufficiently tested the use of the goods and any product modifications, product changes or product enhancements with regard to the specific intended use in accordance with the state of the art or in any other way. At METZ CONNECT's request, the Customer shall submit and make available meaningful evidence (e.g. test and laboratory protocols, certifications, etc.).

© 2025 METZ CONNECT - Technische Änderungen vorbehalten! Subject to modifications! Sous réserve de modifications techniques!

Data sheet

Modul wall outlet surface mounted flat 2 port unequipped pure white

P/N
1309150102-E
EAN 4250184111238
2025/09/17
Version: Z

Accessories

P/N	Designation
130910-DNV	E-DAT modul Cat.6_A 8(8) jack DNV
130910-I	E-DAT modul Cat.6_A 8(8) jack
130910-Z	E-DAT modul Cat.6_A 8(8) jack, (12 pcs)
1309A0-I	E-DAT modul coupler 8(8) 180° class E_A
130B11-DNV	$C6_A$modul 180° jack DNV
130B11-E	$C6_A$modul 180° jack
816979-0103-I	Dust protection covers for Modul patch panels subway / REG gray
816979-0105-I	Dust protection covers for Modul patch panels subway / REG yellow
816979-0106-I	Dust protection covers for Modul patch panels subway / REG blue
816979-0107-I	Dust protection covers for Modul patch panels subway / REG green
816979-0108-I	Dust protection covers for Modul patch panels subway / REG red

© 2025 METZ CONNECT - Technische Änderungen vorbehalten! Subject to modifications! Sous réserve de modifications techniques!

Data sheet

Modul wall outlet surface mounted flat 2 port unequipped pure white

P/N
1309150102-E
EAN 4250184111238
2025/09/17
Version: Z

Illustrations

Dimensional drawing

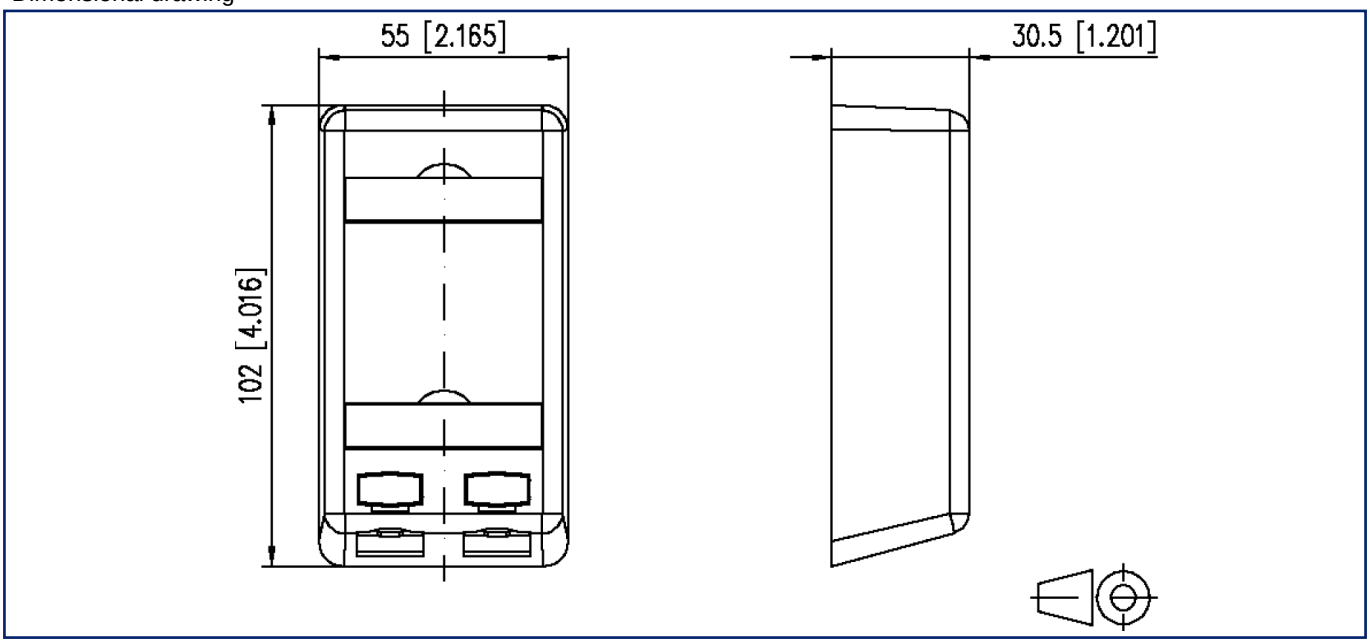

Cut-out

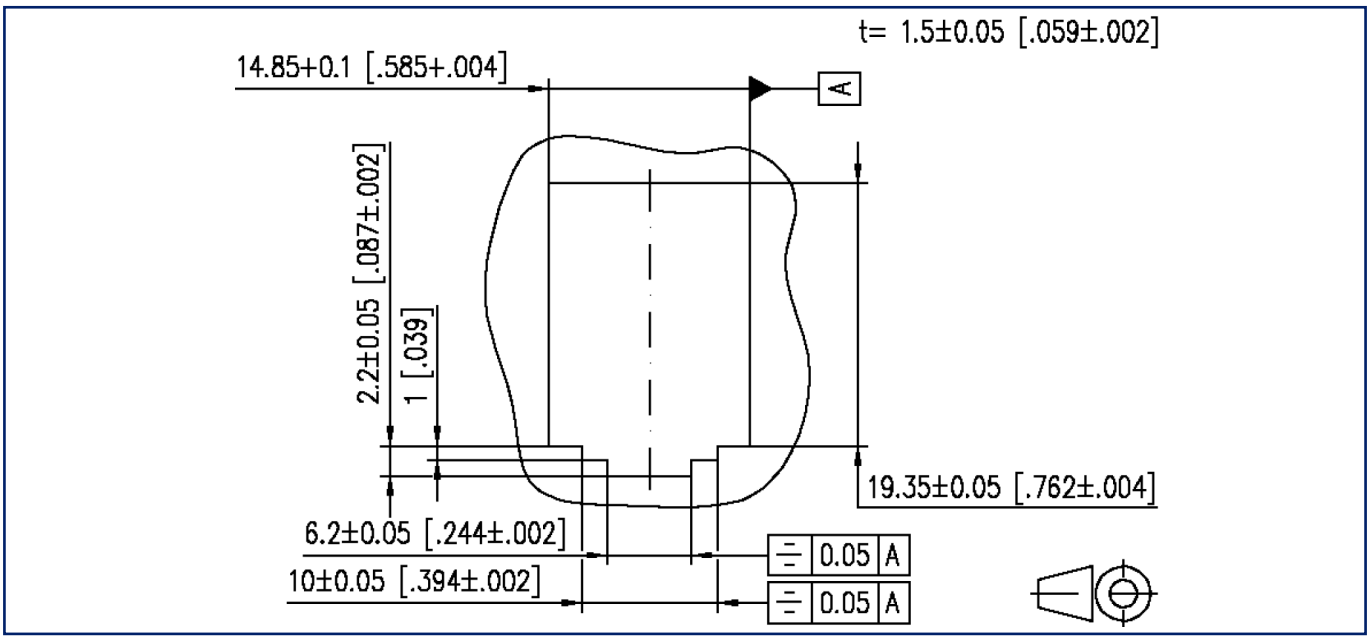

© 2025 METZ CONNECT - Technische Änderungen vorbehalten! Subject to modifications! Sous réserve de modifications techniques!