Data sheet

Subway underfloor unit GB2 Keystone 9 port unequipped pearl white

P/N
130B20S50901-E
EAN 4250184170389
2025/09/17
Version: U

Illustrations

Dimensional drawing

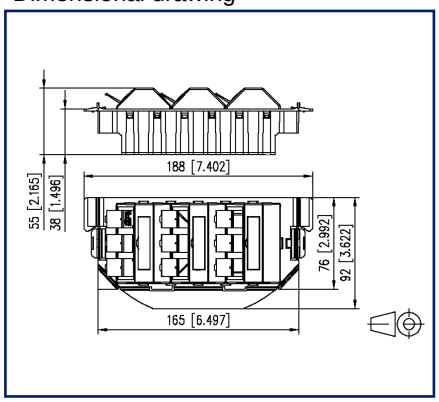

Cut-out

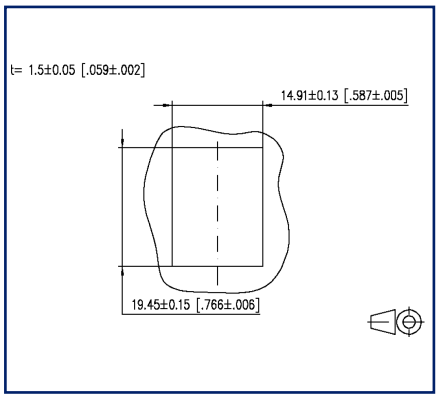

See enlarged drawings at the end of document

Product specification

- termination unit for mounting in service outlets in underfloor systems suitable for single port modules in Keystone design
- suitable for underfloor service outlets of OBO Bettermann (Ackermann) and some types of :hager (Electraplan Solutions)
- GB2 design
- incl. module frame, caps and dummy covers
- module plug direction 45° upwards
- with label window for enclosed identification labels
- label sheet 209 x 294 mm see accessory
- integrated dust protection covers (also colored)
- color: black device casing, pearl white covers

- variants: 3 ports, 6 ports, 9 ports

© 2025 METZ CONNECT - Technische Änderungen vorbehalten! Subject to modifications! Sous réserve de modifications techniques!

Data sheet

Subway underfloor unit GB2 Keystone 9 port unequipped pearl white

P/N
130B20S50901-E
EAN 4250184170389
2025/09/17
Version: U

Technical Data

General Data	
Fields of application	office areas
Mechanical measurement according to MICE	M1
Ingress measurement according to MICE	I1
Climatic measurement according to MICE	C1
Electromagnetic measurement according to MICE	E3
Design	wall outlet
Mounting style	GB2
Color	pearl white RAL 1013
Dimensions	
Dimension (L x W x H)	55 mm x 76 mm x 188 mm
Dimension (L x W x H)	2.165 in. x 2.992 in. x 7.402 in.
Labeling option	label window with identification label
Marking option	by dust protection

Connections/interfaces	
Number of ports interface 2	9
Number of ports interface 2 equipped	0
Number of ports with dust protection interface 2	9
Module plug-in direction	45° upwards
Mechanical data	
Cut-out	Keystone

Materials and material properties	
Material - Supporting frame	GD-Zn
Material - Cover part(s)	ABS
Material - Label window	ABS, transparent
Material - Dust protection	ABS
Halogen free	yes
RoHS	compliant

© 2025 METZ CONNECT - Technische Änderungen vorbehalten! Subject to modifications! Sous réserve de modifications techniques!

Data sheet

Subway underfloor unit GB2 Keystone 9 port unequipped pearl white

P/N
130B20S50901-E
EAN 4250184170389
2025/09/17
Version: U

Technical Data

Classifications

ETIM 7.0	EC001264
ETIM 8.0	EC001264
ETIM 9.0	EC001264
ETIM 10.0	EC001264

Packing details

Type of packaging	1 pc(s) / plastic bag

Application note

This product is a standard product of METZ CONNECT. METZ CONNECT is not aware of the specific intended use of the goods by the Customer or any customers of the Customer. The Customer guarantees that it has fully and sufficiently tested the use of the goods and any product modifications, product changes or product enhancements with regard to the specific intended use in accordance with the state of the art or in any other way. At METZ CONNECT's request, the Customer shall submit and make available meaningful evidence (e.g. test and laboratory protocols, certifications, etc.).

© 2025 METZ CONNECT - Technische Änderungen vorbehalten! Subject to modifications! Sous réserve de modifications techniques!

Data sheet

Subway underfloor unit GB2 Keystone 9 port unequipped pearl white

P/N
130B20S50901-E
EAN 4250184170389
2025/09/17
Version: U

Accessories

P/N	Designation
1309310099-I	GB fastening kit PUK
1309320001-I	Subway blind cover
1309320301-E	Subway 3 port cover
1309330300KE	Subway 3 port keystone module frame
1309380101-I	Subway DIN device frame
13093EP2-E	Subway underfloor unit GBV2D unequipped
13093EPAK3-E	Mounting plate for GBV 3 x Keystone cut-out
13093EPAM3-E	Mounting plate for GBV 4 x module cut-out
816979-0103-I	Dust protection covers for Modul patch panels subway / REG gray
816979-0105-I	Dust protection covers for Modul patch panels subway / REG yellow
816979-0106-I	Dust protection covers for Modul patch panels subway / REG blue
816979-0107-I	Dust protection covers for Modul patch panels subway / REG green
816979-0108-I	Dust protection covers for Modul patch panels subway / REG red
899650-01	Label sheet for wall outlets

© 2025 METZ CONNECT - Technische Änderungen vorbehalten! Subject to modifications! Sous réserve de modifications techniques!

Data sheet

Subway underfloor unit GB2 Keystone 9 port unequipped pearl white

P/N
130B20S50901-E
EAN 4250184170389
2025/09/17
Version: U

Illustrations

Dimensional drawing

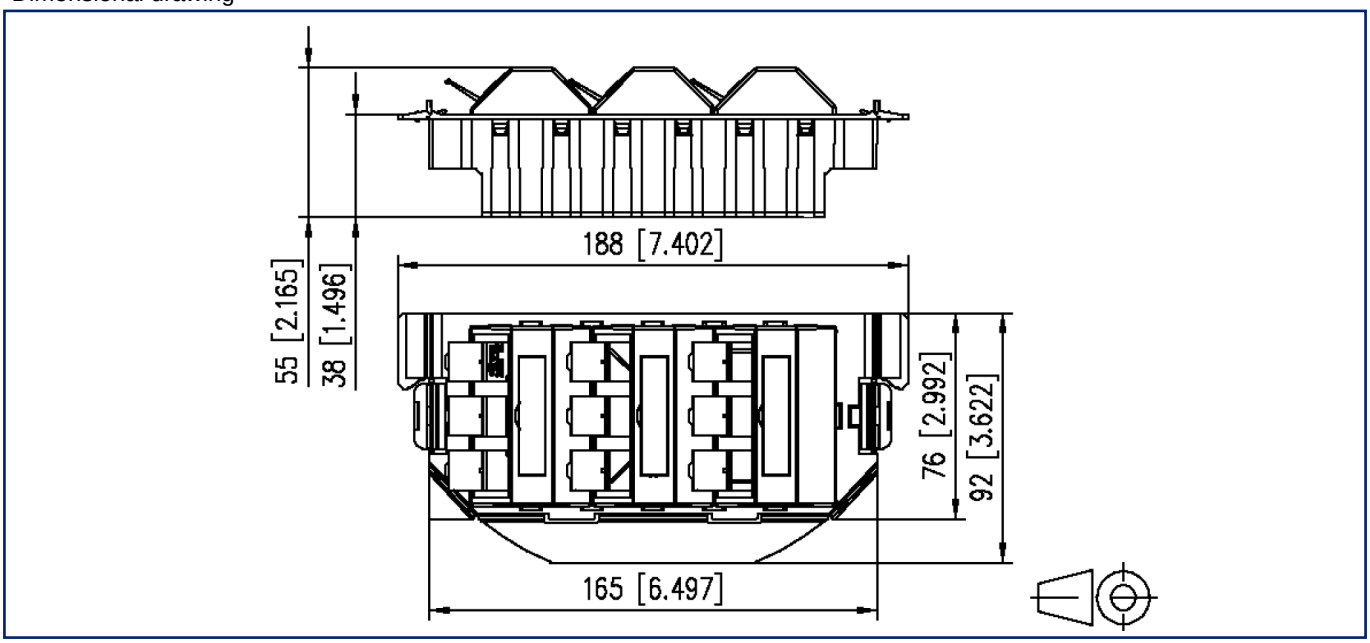

Cut-out

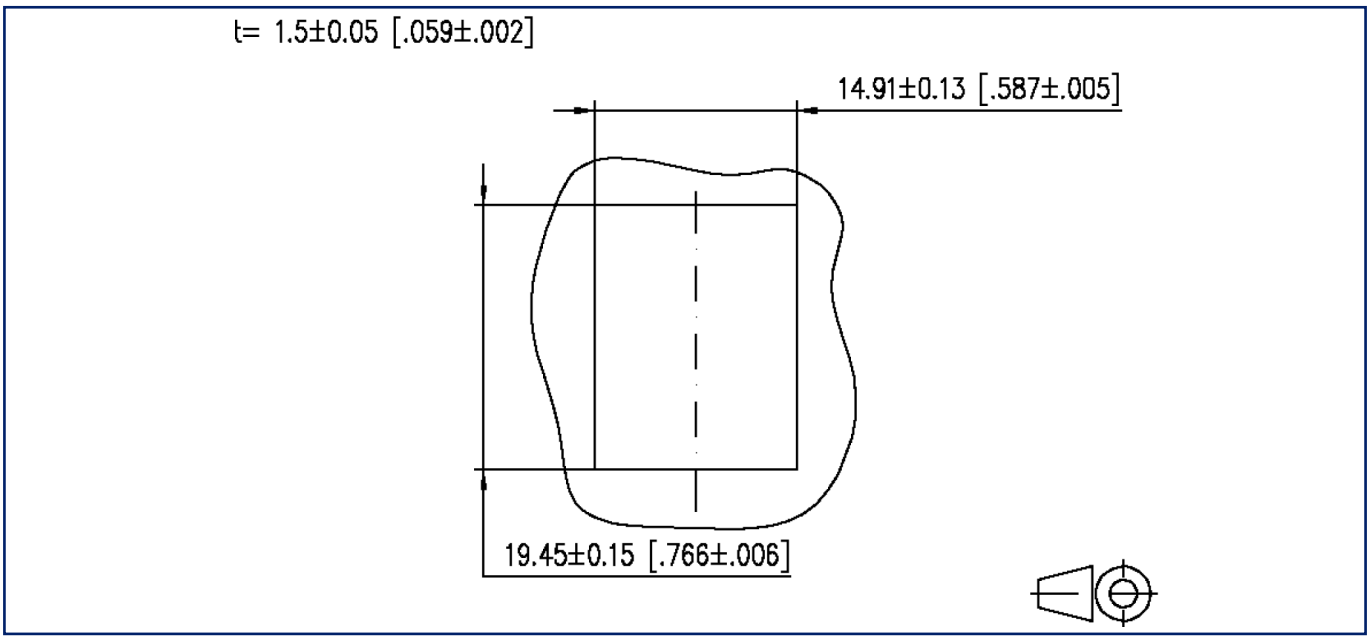

METZ CONNECT GmbH | Im Tal 2 | 78176 Blumberg | Germany
Phone +49 7702 533-0 | Fax +49 7702 533-433
Weitere Dokumentation siehe / additional documentation see / documentation supplémentaire voir www.metz-connect.com

© 2025 METZ CONNECT - Technische Änderungen vorbehalten! Subject to modifications! Sous réserve de modifications techniques!