Data sheet

Keystone wall outlet 45x45 mm
1 port unequipped, pure white RAL 9010

P/N
130914J4502KE
EAN 4250184140979
2025/09/17
Version: Y

Illustrations

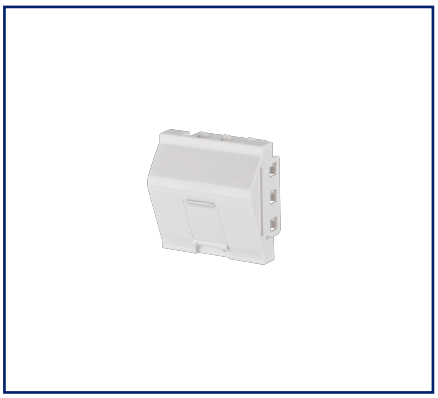

Dimensional drawing

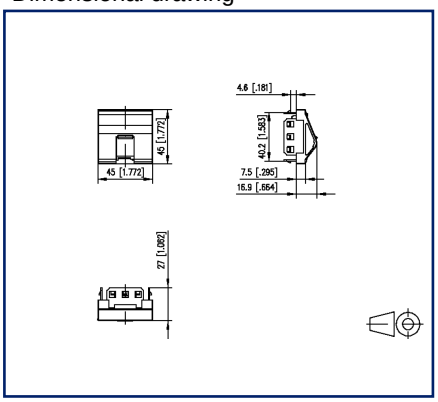

Cut-out

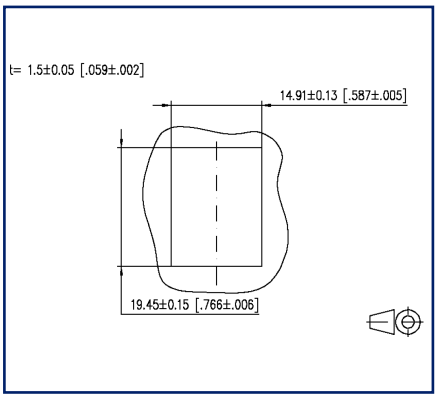

See enlarged drawings at the end of document

Product specification

- duct connector to hold one or two individual modules in Keystone design
- module plug direction approx. 30° downwards
- strain relief on module
- dust protector flaps
- suitable for cable ducts with 45 snap-lock (4.6 mm detent) for example GGK raceway with 45 mm top section and M45 installation devices, OBO Rapid 45-2 and comparable manufacturers
- vertical and horizontal mounting direction
- cover parts in color similar to pure white RAL 9010, glossy surface
- reference list on request and on our website www.metz-connect.com
- variants: 1 port, 2 ports

© 2025 METZ CONNECT - Technische Änderungen vorbehalten! Subject to modifications! Sous réserve de modifications techniques!

METZ CONNECT GmbH | Im Tal 2 | 78176 Blumberg | Germany
Phone +49 7702 533-0 | Fax +49 7702 533-433

Data sheet

Keystone wall outlet 45x45 mm
1 port unequipped, pure white RAL 9010

P/N
130914J4502KE
EAN 4250184140979
2025/09/17
Version: Y

Technical Data

General Data	
Fields of application	office areas
Mechanical measurement according to MICE	M1
Ingress measurement according to MICE	I1
Climatic measurement according to MICE	C1
Electromagnetic measurement according to MICE	E3
Design	wall outlet
Color	pure white - RAL 9010
Dimensions	
Dimension (L x W x H)	27.5 mm x 45 mm x 45 mm
Dimension (L x W x H)	1.083 in. x 1.772 in. x 1.772 in.
Weight	11 g
Weight	0.0243 lb
Labeling option	on housing

Connections/interfaces	
Number of ports interface 2	1
Number of ports interface 2 equipped	0
Number of ports with dust protection interface 2	1
Module plug-in direction	30° downwards

Mechanical data	
Cut-out	Keystone
strain relief	attached to module

Materials and material properties	
Material - Cover part(s)	ABS
Material - Dust protection	ABS
Halogen free	yes
RoHS	compliant

© 2025 METZ CONNECT - Technische Änderungen vorbehalten! Subject to modifications! Sous réserve de modifications techniques!

Data sheet

Keystone wall outlet 45x45 mm
1 port unequipped, pure white RAL 9010

P/N
130914J4502KE
EAN 4250184140979
2025/09/17
Version: Y

Technical Data

Classifications

ETIM 7.0	EC001264
ETIM 8.0	EC001264
ETIM 9.0	EC001264
ETIM 10.0	EC001264

Packing details

Type of packaging	1 pc(s) / plastic bag

Application note

This product is a standard product of METZ CONNECT. METZ CONNECT is not aware of the specific intended use of the goods by the Customer or any customers of the Customer. The Customer guarantees that it has fully and sufficiently tested the use of the goods and any product modifications, product changes or product enhancements with regard to the specific intended use in accordance with the state of the art or in any other way. At METZ CONNECT's request, the Customer shall submit and make available meaningful evidence (e.g. test and laboratory protocols, certifications, etc.).

© 2025 METZ CONNECT - Technische Änderungen vorbehalten! Subject to modifications! Sous réserve de modifications techniques!

Keystone wall outlet 45x45 mm
1 port unequipped, pure white RAL 9010

P/N
130914J4502KE
EAN 4250184140979
2025/09/17
Version: Y

Accessories

P/N	Designation
130910R4502-E	Frame 80x80 mm for 45x45 mm white

© 2025 METZ CONNECT - Technische Änderungen vorbehalten! Subject to modifications! Sous réserve de modifications techniques!

Data sheet

Keystone wall outlet 45x45 mm
1 port unequipped, pure white RAL 9010

P/N
130914J4502KE
EAN 4250184140979
2025/09/17
Version: Y

Illustrations

Dimensional drawing

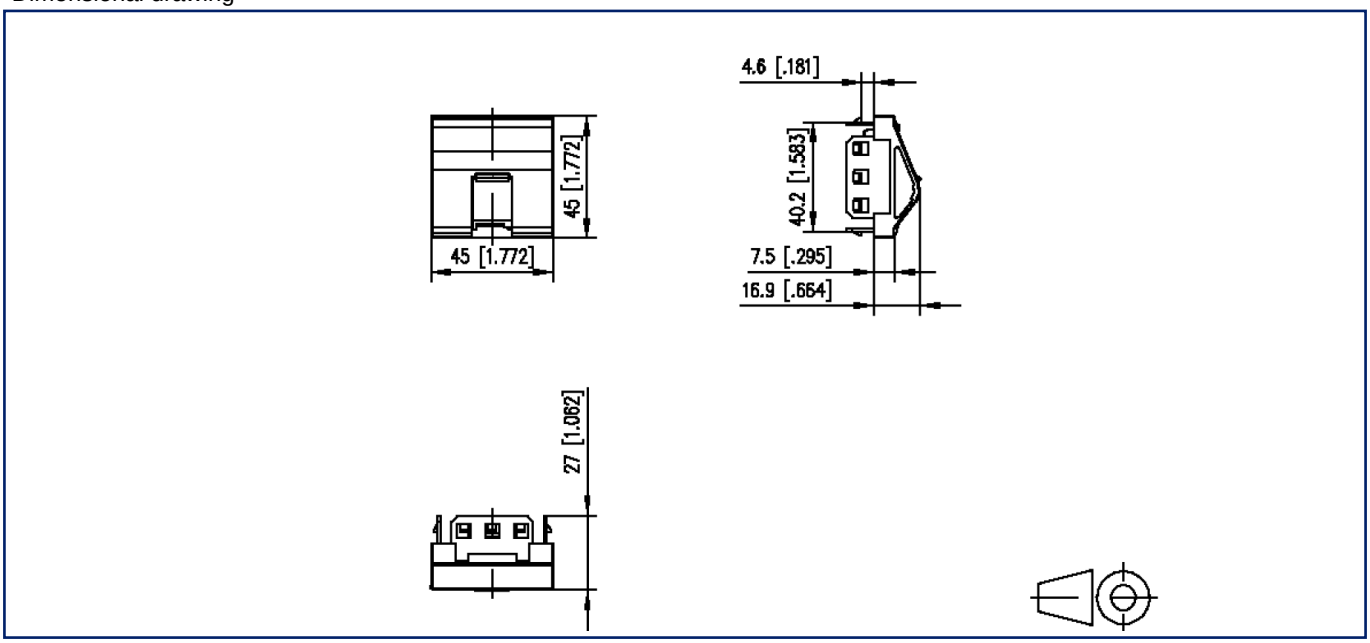

Cut-out

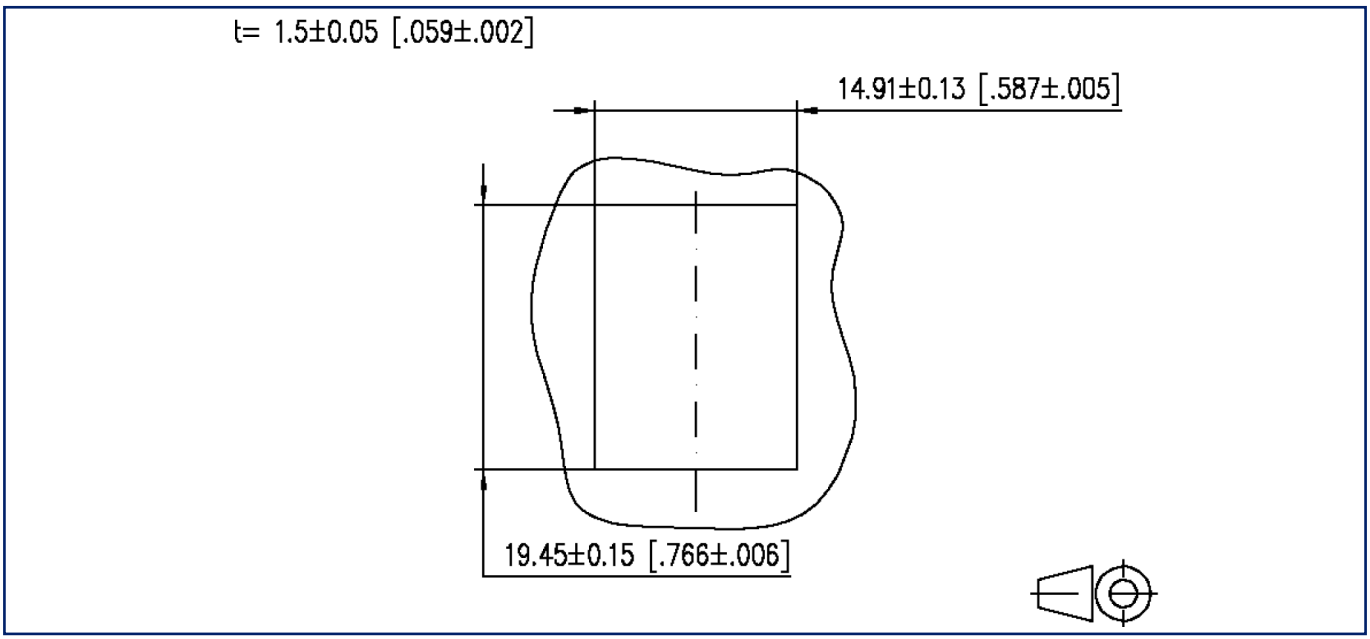

© 2025 METZ CONNECT - Technische Änderungen vorbehalten! Subject to modifications! Sous réserve de modifications techniques!