Data sheet

Keystone wall outlet flush mounted trunking installation 2 port unequipped pure white

P/N
130B20D21102KE
EAN 4250184157793
2025/11/26
Version: AA

Illustrations

Dimensional drawing

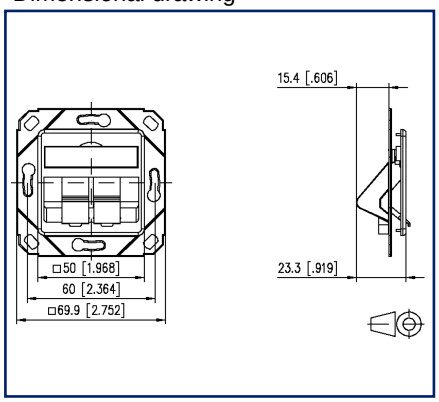

Cut-out

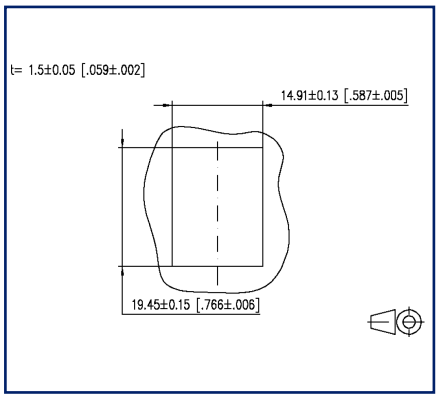

See enlarged drawings at the end of document

Product specification

- termination unit for individual modules in Keystone design mounted in cable duct
- module plug direction 45° downwards
- strain relief on the module
- with label window for enclosed identification labels
- label sheet 209 x 294 mm see accessories
- integrated dust protection covers (also colored versions available)
- structured surface with matt finish
- compatible with design central units of switch lines
- variants: 1 port, 2 ports, 3 ports

© 2025 METZ CONNECT - Technische Änderungen vorbehalten! Subject to modifications! Sous réserve de modifications techniques!

METZ CONNECT GmbH | Im Tal 2 | 78176 Blumberg | Germany
Phone +49 7702 533-0 | Fax +49 7702 533-433

Data sheet

Keystone wall outlet flush mounted trunking installation 2 port unequipped pure white

P/N
130B20D21102KE
EAN 4250184157793
2025/11/26
Version: AA

Technical Data

General Data	
Fields of application	office areas
Mechanical measurement according to MICE	M1
Ingress measurement according to MICE	I1
Climatic measurement according to MICE	C1
Electromagnetic measurement according to MICE	E3
Design	wall outlet
Mounting style	UPk
Color	pure white - RAL 9010
Dimensions	
Dimension (L x W x H)	23.3 mm x 69.9 mm x 69.9 mm
Dimension (L x W x H)	0.917 in. x 2.752 in. x 2.752 in.
Labeling option	label window with identification label
Marking option	by dust protection

Connections/interfaces	
Number of ports interface 2	2
Number of ports interface 2 equipped	0
Number of ports with dust protection interface 2	2
Module plug-in direction	45° downwards

Mechanical data	
Cut-out	Keystone
strain relief	attached to module

Materials and material properties	
Material - Supporting frame	GD-Zn
Material - Cover part(s)	ABS
Material - Label window	ABS, transparent
Material - Dust protection	ABS
Halogen free	yes
RoHS	compliant

© 2025 METZ CONNECT - Technische Änderungen vorbehalten! Subject to modifications! Sous réserve de modifications techniques!

Keystone wall outlet flush mounted trunking installation 2 port unequipped pure white

P/N
130B20D21102KE
EAN 4250184157793
2025/11/26
Version: AA

Technical Data

Standards/Regulations	
Cover plates for installation devices 1	DIN 49075-1:1989-10
Cover plates for installation devices 2	DIN 49075-2:1989-10

Classifications	
ETIM 7.0	EC001264
ETIM 8.0	EC001264
ETIM 9.0	EC001264
ETIM 10.0	EC001264

Packing details	
Type of packaging	10 pc(s) / box

Application note

This product is a standard product of METZ CONNECT. METZ CONNECT is not aware of the specific intended use of the goods by the Customer or any customers of the Customer. The Customer guarantees that it has fully and sufficiently tested the use of the goods and any product modifications, product changes or product enhancements with regard to the specific intended use in accordance with the state of the art or in any other way. At METZ CONNECT's request, the Customer shall submit and make available meaningful evidence (e.g. test and laboratory protocols, certifications, etc.).

© 2025 METZ CONNECT - Technische Änderungen vorbehalten! Subject to modifications! Sous réserve de modifications techniques!

Data sheet

Keystone wall outlet flush mounted trunking installation 2 port unequipped pure white

P/N
130B20D21102KE
EAN 4250184157793
2025/11/26
Version: AA

Accessories

P/N	Designation
130829-02-I	Surface mount frame 85 x 85 x 35 mm - Single, pure white
130829-4302-I	Surface mount frame 85 x 85 x 43 mm - single, pure white
1308895010-I	T-Slot mounting bracket for wall outlets - horizontal mounting without 50 mm, separation cup
1308895011-I	T-Slot mounting bracket for wall outlets - horizontal mounting 50 mm, with separation cup
1308895020-I	DIN Rail mounting bracket for wall outlets - horizontal mounting 50 mm, without separation cup
1308895021-I	DIN Rail mounting bracket for wall outlets - horizontal mounting 50 mm, with separation cup
1308895040-I	T-Slot mounting bracket for wall outlets - vertical mounting 50 mm, without separation cup
1308895041-I	T-Slot mounting bracket for wall outlets - vertical mounting 50 mm, with separation cup
1308895220-I	DIN rail mounting bracket for wall outlets - horizontal mounting 52 mm, without separation cup
1308895221-I	DIN rail mounting bracket for wall outlets - horizontal mounting 52 mm, with separation cup
1308895510-I	T-Slot mounting bracket for wall outlets - horizontal mounting 55 mm, without separation cup
1308895511-I	T-Slot mounting bracket for wall outlets - horizontal mounting 55 mm, with separation cup
1308895520-I	DIN rail mounting bracket for wall outlets - horizontal mounting 55 mm, without separation cup
1308895521-I	DIN rail mounting bracket for wall outlets - horizontal mounting 55 mm, with separation cup
1308895540-I	T-Slot mounting bracket for wall outlets - vertical mounting 55 mm, without separation cup
1308895541-I	T-Slot mounting bracket for wall outlets - vertical mounting 55 mm, with separation cup
130889ADTK-I	Mounting bracket ADTK for OBO
130889ADTSA-I	Mounting bracket ADTSA for OBO
130889FKH-I	Mounting bracket FR for Kleinhuis
130889FNI-I	Mounting bracket FR for Niedax
130889FTE-I	Mounting bracket FR for Tehalit
130910KI	E-DAT modul Cat.6_A K jack - Keystone style
130910KZ	E-DAT modul Cat.6_A K jack - Keystone style (12 pcs)
130B21-25-E	25Gmodul - Keystone

© 2025 METZ CONNECT - Technische Änderungen vorbehalten! Subject to modifications! Sous réserve de modifications techniques!

Data sheet

Keystone wall outlet flush mounted trunking installation 2 port unequipped pure white

P/N
130B20D21102KE
EAN 4250184157793
2025/11/26
Version: AA

Accessories

130B21-25-Z	25Gmodul - Keystone style (12 pcs)
130B21-E	$C6_A$modul K 180° jack - keystone style
130B21-Z	$C6_A$modul K 180° jack - Keystone style (12 pcs)
820394-0105-I	Dust protection covers for wall outlets yellow
820394-0106-I	Dust protection covers for wall outlets blue
820394-0107-I	Dust protection covers for wall outlets green
820394-0108-I	Dust protection covers for wall outlets red
820395-0102-I	Cover plate 80 x 80 mm, pure white, module
899650-01	Label sheet for wall outlets

© 2025 METZ CONNECT - Technische Änderungen vorbehalten! Subject to modifications! Sous réserve de modifications techniques!

Data sheet

Keystone wall outlet flush mounted trunking installation 2 port unequipped pure white

P/N
130B20D21102KE
EAN 4250184157793
2025/11/26
Version: AA

Illustrations

Dimensional drawing

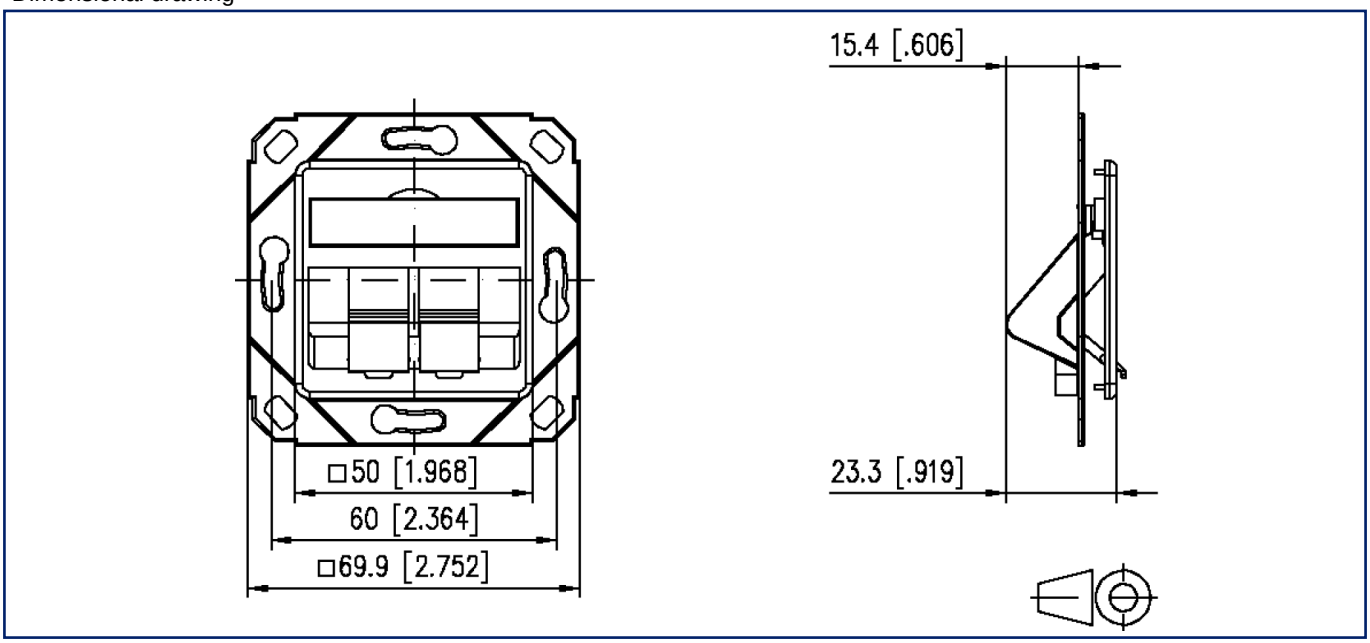

Cut-out

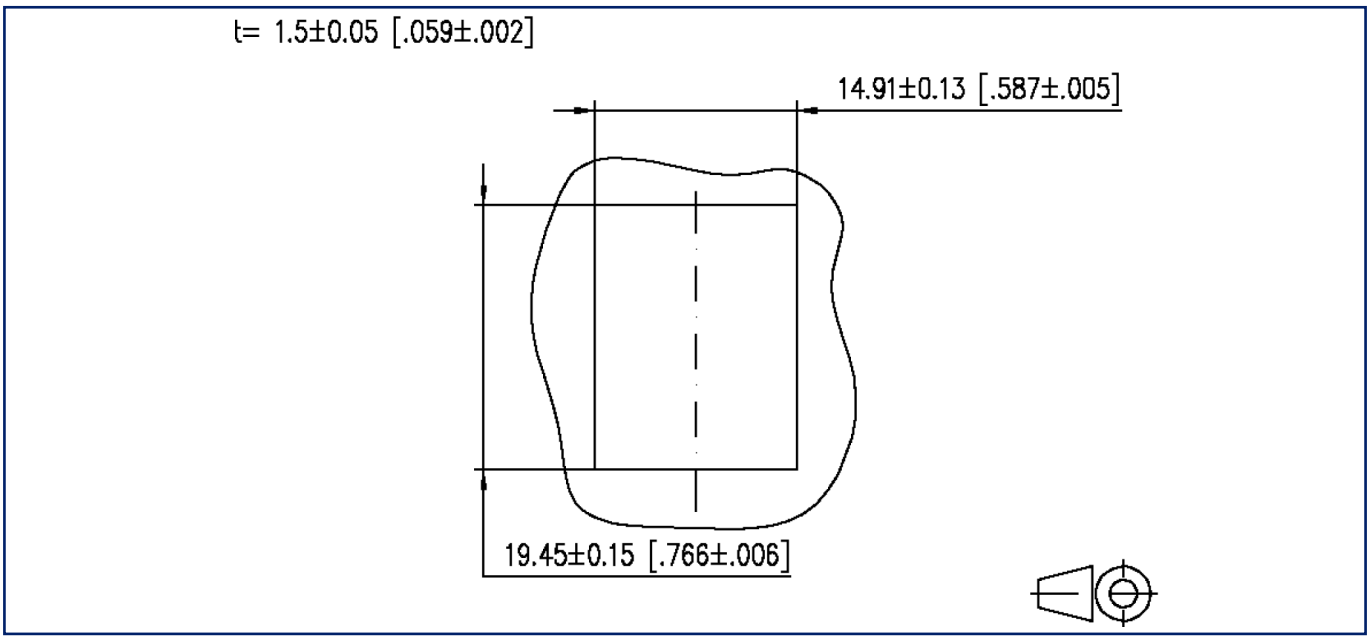

© 2025 METZ CONNECT - Technische Änderungen vorbehalten! Subject to modifications! Sous réserve de modifications techniques!

Data sheet

Keystone wall outlet flush mounted trunking installation 2 port unequipped pure white

P/N
130B20D21102KE
EAN 4250184157793
2025/11/26
Version: AA

Illustrations

Wiring diagram

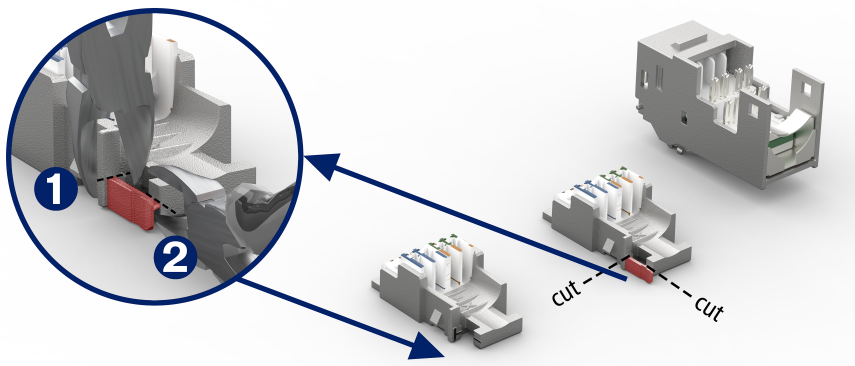

When using the Keystone module **130910KI** or **130910KZ** in the 2 port connection boxes **130B20D21002KE**, **130B20D1102KE** or **130B20D21200KE**, which are Installed in flush-mounted or cavity wall boxes, the optional earthing lug on the charging unit must be removed.

3 port connection boxes 130B20D31xxxKE **cannot** be used in flush-mounted or cavity wall boxes!

© 2025 METZ CONNECT - Technische Änderungen vorbehalten! Subject to modifications! Sous réserve de modifications techniques!