Data sheet

OpDAT 4 AP for 4xSC-S/LC-D/E2-S/ST

P/N
1501120002-E
EAN 4250184107125
2025/09/17
Version: Y

Illustrations

Dimensional drawing

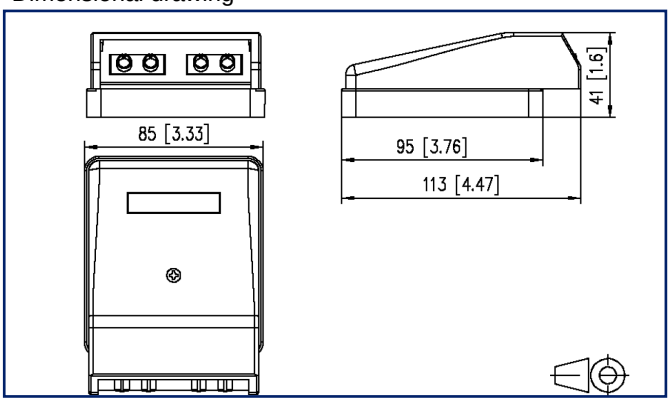

See enlarged drawings at the end of document

Product specification

- fiber optic termination unit for mounting in cable duct / surface mounting with fiber optic adapters
- unequipped for simplex or duplex adapters
- bending radius of approx. 30 mm is met due to integrated cable reservoir
- plug direction 10° downwards
- strain relief with cable ties possible
- with label window for enclosed identification labels
- suitable for preassembled cables and on-site assembly of plugs
- for mini breakout cables
- cover parts in pure white RAL 9010

© 2025 METZ CONNECT - Technische Änderungen vorbehalten! Subject to modifications! Sous réserve de modifications techniques!

METZ CONNECT GmbH | Im Tal 2 | 78176 Blumberg | Germany
Phone +49 7702 533-0 | Fax +49 7702 533-433

Data sheet
OpDAT 4 AP for 4xSC-S/LC-D/E2-S/ST

P/N
1501120002-E
EAN 4250184107125
2025/09/17
Version: Y

Technical Data

General Data	
Fields of application	office areas
Mechanical measurement according to MICE	M1
Ingress measurement according to MICE	I1
Climatic measurement according to MICE	C1
Electromagnetic measurement according to MICE	E3
Design	wall outlet
Mounting style	AP
Color	pure white - RAL 9010
Dimensions	
Dimension (L x W x H)	41 mm x 85 mm x 113 mm
Dimension (L x W x H)	1.614 in. x 3.346 in. x 4.449 in.
Labeling option	label window with identification label

Connections/interfaces	
Number of ports interface 2	4
Number of ports interface 2 equipped	0
Module plug-in direction	10° downwards

Mechanical data	
strain relief	cable tie

Materials and material properties	
Material - Housing	Plastics
Material - Surface mount frame	ABS
Material - Cover part(s)	ABS
Material - Label window	ABS, transparent
Material - Dust protection	ABS
Halogen free	yes
RoHS	compliant

© 2025 METZ CONNECT - Technische Änderungen vorbehalten! Subject to modifications! Sous réserve de modifications techniques!

OpDAT 4 AP for 4xSC-S/LC-D/E2-S/ST

P/N
1501120002-E
EAN 4250184107125
2025/09/17
Version: Y

Technical Data

Classifications

ETIM 7.0	EC001409
ETIM 8.0	EC001409
ETIM 9.0	EC001409
ETIM 10.0	EC001409

Packing details

Type of packaging	1 pc(s) / box

Application note

This product is a standard product of METZ CONNECT. METZ CONNECT is not aware of the specific intended use of the goods by the Customer or any customers of the Customer. The Customer guarantees that it has fully and sufficiently tested the use of the goods and any product modifications, product changes or product enhancements with regard to the specific intended use in accordance with the state of the art or in any other way. At METZ CONNECT's request, the Customer shall submit and make available meaningful evidence (e.g. test and laboratory protocols, certifications, etc.).

© 2025 METZ CONNECT - Technische Änderungen vorbehalten! Subject to modifications! Sous réserve de modifications techniques!

Accessories

P/N	Designation
15090001-I	OpDAT Simplex adapter ST SM+MM
15090075-I	OpDAT adapter LC-Duplex OM4
15090076-I	OpDAT adapter LC-Duplex APC OS2
15090077-I	OpDAT adapter LC-Duplex OM3

© 2025 METZ CONNECT - Technische Änderungen vorbehalten! Subject to modifications! Sous réserve de modifications techniques!

OpDAT 4 AP for 4xSC-S/LC-D/E2-S/ST

P/N
1501120002-E
EAN 4250184107125
2025/09/17
Version: Y

Illustrations

Dimensional drawing

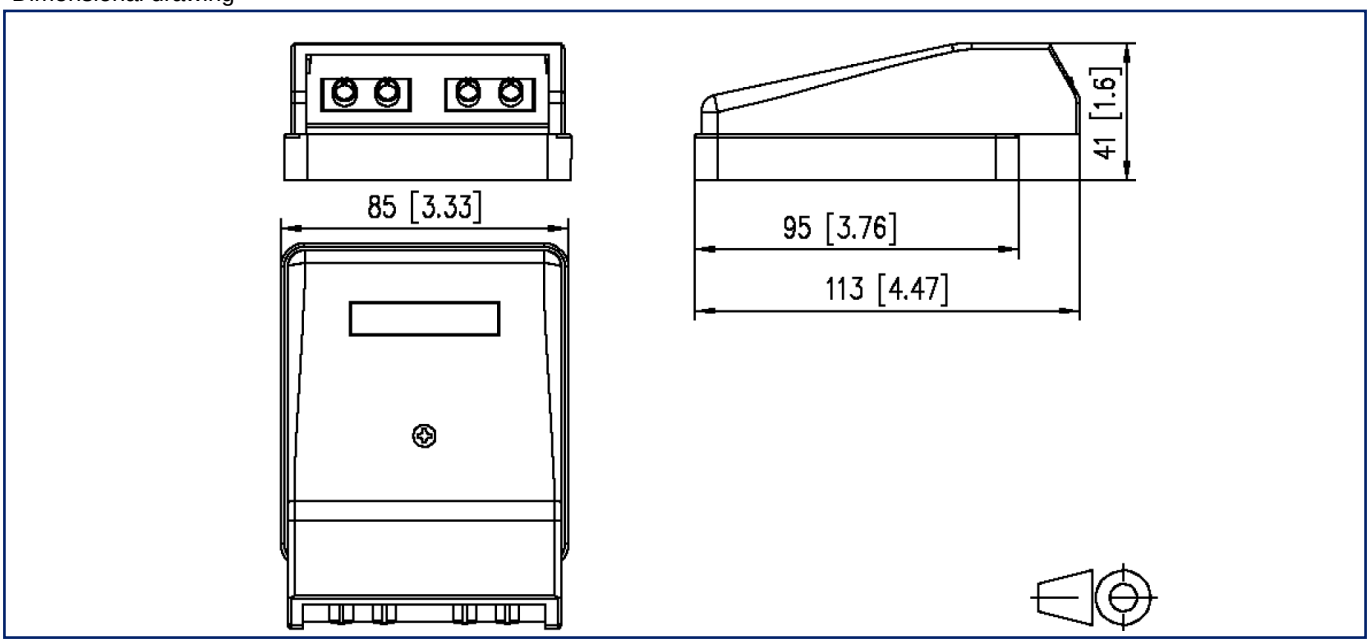

© 2025 METZ CONNECT - Technische Änderungen vorbehalten! Subject to modifications! Sous réserve de modifications techniques!