Data sheet

OpDAT cable guide for OpDAT 4 UP

P/N
150810-I
EAN 4250184109235
2025/09/18
Version: P

Illustrations

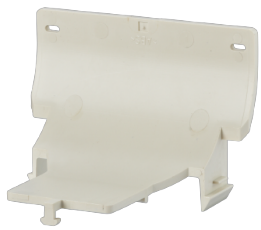

Dimensional drawing

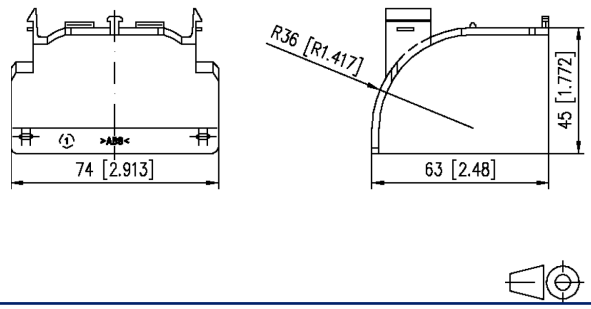

See enlarged drawings at the end of document

Product specification

- for combination with the fiber optic wall outlet OpDAT 4 UP
- cable guide for fiber optic wall outlet to maintain minimum bending radii for fiber optic cables to TIA/EIA 568A (> 30 mm)
- in conjunction with mounting bracket for wall outlets (see accessory)
- cable feed with cable tie tension relief

© 2025 METZ CONNECT - Technische Änderungen vorbehalten! Subject to modifications! Sous réserve de modifications techniques!

METZ CONNECT GmbH | Im Tal 2 | 78176 Blumberg | Germany
Phone +49 7702 533-0 | Fax +49 7702 533-433

Data sheet

OpDAT cable guide for OpDAT 4 UP

P/N
150810-I
EAN 4250184109235
2025/09/18
Version: P

Technical Data

General Data	
Mechanical measurement according to MICE	M1
Ingress measurement according to MICE	I1
Climatic measurement according to MICE	C1
Electromagnetic measurement according to MICE	E3
Design	cable guide
Mounting style	Accessories
Color	pearl white RAL 1013
Dimensions	
Dimension (L x W x H)	45 mm x 74 mm x 65 mm
Dimension (L x W x H)	1.772 in. x 2.913 in. x 2.559 in.
Installation Height	45 mm
Installation Height	1.772 in.
Mechanical data	
Mounting method	pluggable

Materials and material properties	
Material	ABS
Halogen free	yes
RoHS	compliant
Classifications	
ETIM 7.0	EC000322
ETIM 8.0	EC000322
ETIM 9.0	EC000322
ETIM 10.0	EC000322

Packing details	
Type of packaging	10 pc(s) / plastic bag

Application note

This product is a standard product of METZ CONNECT. METZ CONNECT is not aware of the specific intended use of the goods by the Customer or any customers of the Customer. The Customer guarantees that it has fully and sufficiently tested the use of the goods and any product modifications, product changes or product enhancements with regard to the specific intended use in accordance with the state of the art or in any other way. At METZ CONNECT's request, the Customer shall submit and make available meaningful evidence (e.g. test and laboratory protocols, certifications, etc.).

© 2025 METZ CONNECT - Technische Änderungen vorbehalten! Subject to modifications! Sous réserve de modifications techniques!

OpDAT cable guide for OpDAT 4 UP

P/N
150810-I
EAN 4250184109235
2025/09/18
Version: P

Accessories from

P/N	Designation
1501100002-E	OpDAT 4 UP for 4xSC-S/LC-D/E2-S/ST
1501103102-E	OpDAT 4 UP 4xST SM+MM
1501105002-E	OpDAT 4 UP for 2xSC-D/LC-Q/ST-D
1501105201-E	OpDAT 4 UP 2xSC-D MM (ceramic) pearl white
1501107302-E	OpDAT 4 UP 2xLC-D OM2
150110C202-E	OpDAT 4 UP 2xSC-D MM

© 2025 METZ CONNECT - Technische Änderungen vorbehalten! Subject to modifications! Sous réserve de modifications techniques!

OpDAT cable guide for OpDAT 4 UP

P/N
150810-I
EAN 4250184109235
2025/09/18
Version: P

Illustrations

Dimensional drawing

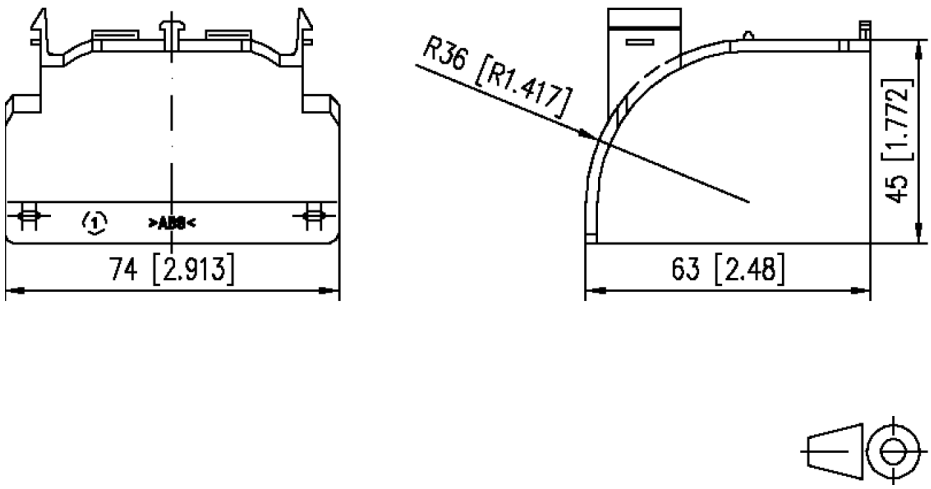

© 2025 METZ CONNECT - Technische Änderungen vorbehalten! Subject to modifications! Sous réserve de modifications techniques!