Data sheet

Keystone wall outlet EU-style 2 port unequipped

P/N
1309152502KE
EAN 4250184140917
2025/09/17
Version: U

Illustrations

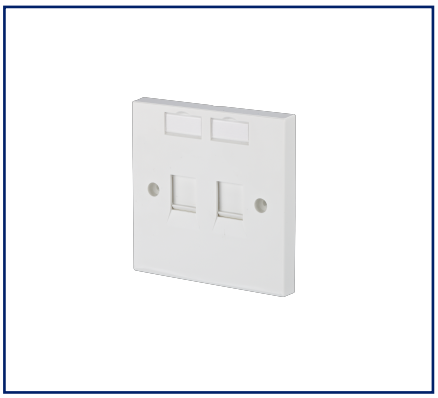

Dimensional drawing

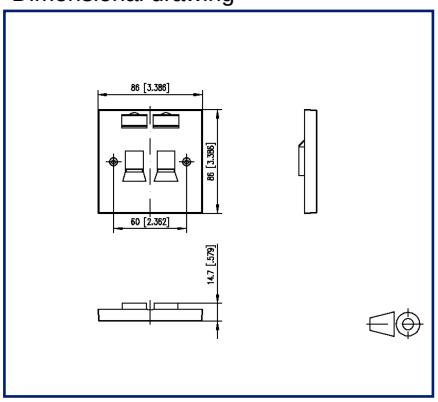

Cut-out

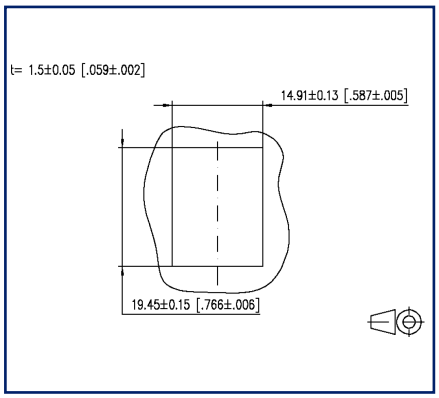

See enlarged drawings at the end of document

Product specification

- flush-mounted termination unit for two individual Keystone modules
- EU style 86 x 86mm
- straight plug direction
- strain relief with cable tie at the module
- label window for identification labels (labels included in the delivery)
- integrated dust protection shutter
- cover parts in color similar to pure white RAL 9010, glossy surface

- variants: 1 port, 2 ports

© 2025 METZ CONNECT - Technische Änderungen vorbehalten! Subject to modifications! Sous réserve de modifications techniques!

METZ CONNECT GmbH | Im Tal 2 | 78176 Blumberg | Germany
Phone +49 7702 533-0 | Fax +49 7702 533-433

Data sheet

Keystone wall outlet EU-style 2 port unequipped

P/N
1309152502KE
EAN 4250184140917
2025/09/17
Version: U

Technical Data

General Data	
Fields of application	office areas
Mechanical measurement according to MICE	M1
Ingress measurement according to MICE	I1
Climatic measurement according to MICE	C1
Electromagnetic measurement according to MICE	E3
Design	wall outlet
Color	white
Dimensions	
Dimension (L x W x H)	14.7 mm x 86 mm x 86 mm
Dimension (L x W x H)	0.579 in. x 3.386 in. x 3.386 in.
Labeling option	label window with identification label

Connections/interfaces	
Number of ports interface 2	2
Number of ports interface 2 equipped	0
Number of ports with dust protection interface 2	2
Module plug-in direction	straight

Mechanical data	
Cut-out	Keystone
strain relief	cable tie

Materials and material properties	
Material - Cover part(s)	ABS
Material - Module support	ABS
Material - Label window	PC (polycarbonate)
Material - Dust protection	ABS
Halogen free	yes
RoHS	compliant

© 2025 METZ CONNECT - Technische Änderungen vorbehalten! Subject to modifications! Sous réserve de modifications techniques!

Data sheet

Keystone wall outlet EU-style 2 port unequipped

P/N
1309152502KE
EAN 4250184140917
2025/09/17
Version: U

Technical Data

Classifications

ETIM 7.0	EC001264
ETIM 8.0	EC001264
ETIM 9.0	EC001264
ETIM 10.0	EC001264

Packing details

Type of packaging	1 pc(s) / plastic bag

Application note

This product is a standard product of METZ CONNECT. METZ CONNECT is not aware of the specific intended use of the goods by the Customer or any customers of the Customer. The Customer guarantees that it has fully and sufficiently tested the use of the goods and any product modifications, product changes or product enhancements with regard to the specific intended use in accordance with the state of the art or in any other way. At METZ CONNECT's request, the Customer shall submit and make available meaningful evidence (e.g. test and laboratory protocols, certifications, etc.).

© 2025 METZ CONNECT - Technische Änderungen vorbehalten! Subject to modifications! Sous réserve de modifications techniques!

Data sheet

Keystone wall outlet EU-style 2 port unequipped

P/N
1309152502KE
EAN 4250184140917
2025/09/17
Version: U

Illustrations

Dimensional drawing

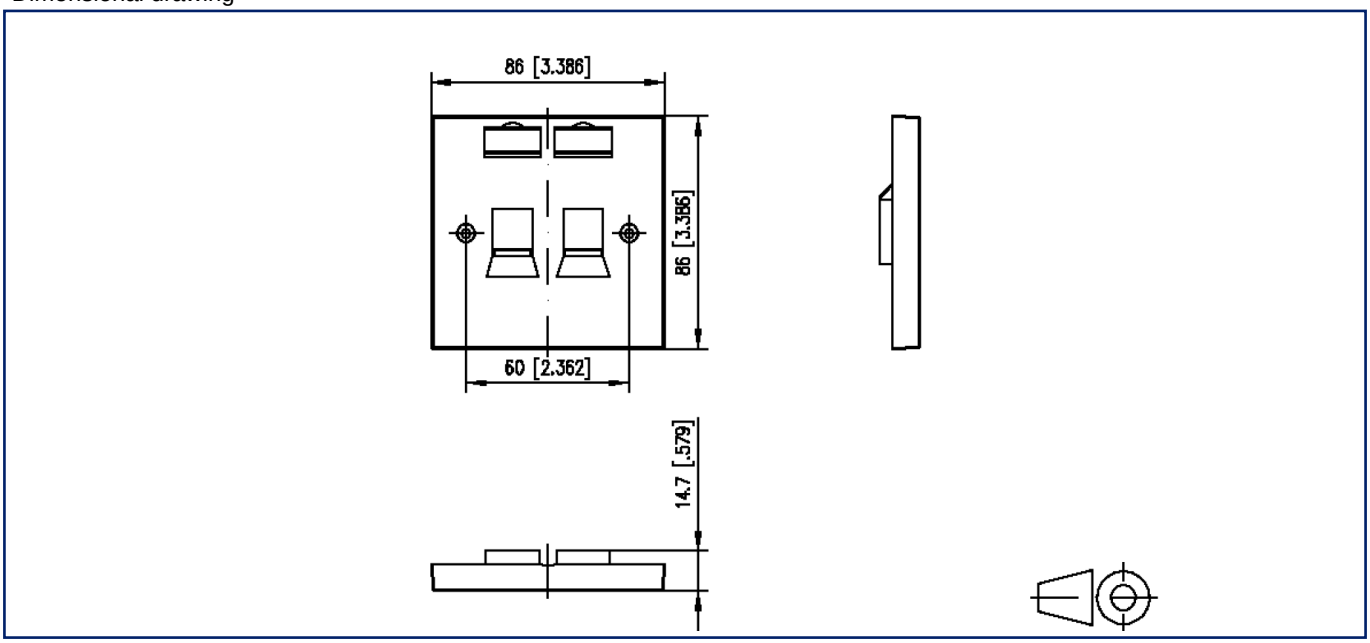

Cut-out

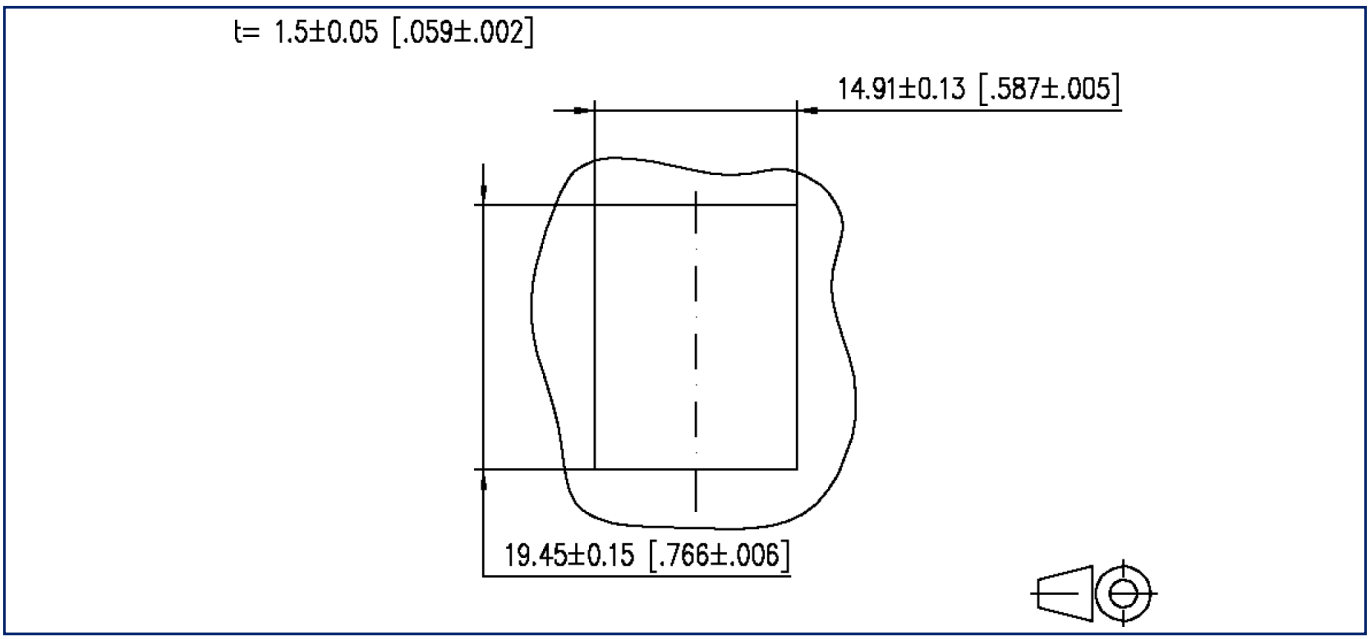

METZ CONNECT GmbH | Im Tal 2 | 78176 Blumberg | Germany
Phone +49 7702 533-0 | Fax +49 7702 533-433
Weitere Dokumentation siehe / additional documentation see / documentation supplémentaire voir www.metz-connect.com

© 2025 METZ CONNECT - Technische Änderungen vorbehalten! Subject to modifications! Sous réserve de modifications techniques!