Data sheet

Subway DIN device frame

P/N
1309380101-I
EAN 4250184106463
2025/09/17
Version: N

Illustrations

Dimensional drawing

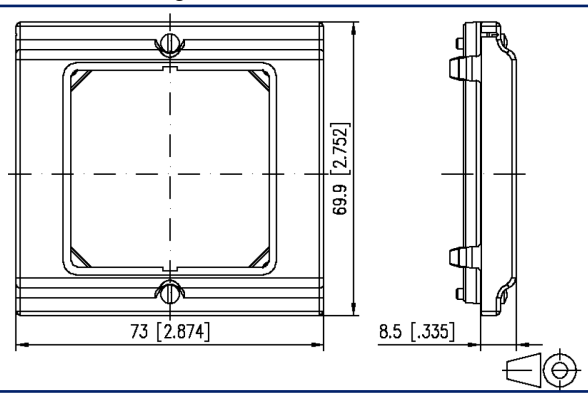

See enlarged drawings at the end of document

Product specification

- intake of DIN wall outlets with UPk and Ek supporting frame in E-DAT subway casing GB2 and GB3

METZ CONNECT GmbH | Im Tal 2 | 78176 Blumberg | Germany
Phone +49 7702 533-0 | Fax +49 7702 533-433

© 2025 METZ CONNECT - Technische Änderungen vorbehalten! Subject to modifications! Sous réserve de modifications techniques!

Data sheet
Subway DIN device frame

P/N
1309380101-I
EAN 4250184106463
2025/09/17
Version: N

Technical Data

General Data	
Mechanical measurement according to MICE	M1
Ingress measurement according to MICE	I1
Climatic measurement according to MICE	C1
Electromagnetic measurement according to MICE	E3
Design	device frame
Mounting style	Accessories
Color	pearl white RAL 1013
Dimensions	
Dimension (W x H)	73 mm x 69.9 mm
Dimension (W x H)	2.874 in. x 2.752 in.

Materials and material properties	
Material	ABS
Halogen free	yes
RoHS	compliant

Classifications	
ETIM 7.0	EC001264
ETIM 8.0	EC001264
ETIM 9.0	EC001264
ETIM 10.0	EC001264

Packing details	
Type of packaging	10 pc(s) / box

Application note

This product is a standard product of METZ CONNECT. METZ CONNECT is not aware of the specific intended use of the goods by the Customer or any customers of the Customer. The Customer guarantees that it has fully and sufficiently tested the use of the goods and any product modifications, product changes or product enhancements with regard to the specific intended use in accordance with the state of the art or in any other way. At METZ CONNECT's request, the Customer shall submit and make available meaningful evidence (e.g. test and laboratory protocols, certifications, etc.).

© 2025 METZ CONNECT - Technische Änderungen vorbehalten! Subject to modifications! Sous réserve de modifications techniques!

Data sheet

Subway DIN device frame

P/N
1309380101-I
EAN 4250184106463
2025/09/17
Version: N

Accessories from

P/N	Designation
1309300001-E	Subway underfloor unit GB2 unequipped black
1309300301-E	E-DAT subway 3 port GB2 pearl white
1309300601-E	E-DAT subway 6 port GB2 pearl white
1309300901-E	E-DAT subway 9 port GB2 pearl white
1309310001-E	Subway underfloor unit GB3 unequipped black
1309310301-E	E-DAT subway 3 port GB3 pearl white
1309310601-E	E-DAT subway 6 port GB3 pearl white
1309310901-E	E-DAT subway 9 port GB3 pearl white
1309311201-E	E-DAT subway 12 port GB3 pearl white
1309350301-E	Subway underfloor unit GB2 Modul 3 port unequipped pearl white
1309350601-E	Subway underfloor unit GB2 Modul 6 port unequipped pearl white
1309350901-E	Subway underfloor unit GB2 Modul 9 port unequipped pearl white
1309360301-E	Subway underfloor unit GB3 Modul 3 port unequipped pearl white
1309360601-E	Subway underfloor unit GB3 Modul 6 port unequipped pearl white
1309360901-E	Subway underfloor unit GB3 Modul 9 port unequipped pearl white
1309361201-E	Subway underfloor unit GB3 Modul 12 port unequipped pearl white
130B11S30201-E	$C6_A$modul 3 port 180°M GB2 pearl white
130B11S30301-E	$C6_A$modul 3 port 180°M GB3 pearl white
130B11S60201-E	$C6_A$modul 6 port 180°M GB2 pearl white
130B11S60301-E	$C6_A$modul 6 port 180°M GB3 pearl white
130B11S90201-E	$C6_A$modul 9 port 180°M GB2 pearl white
130B11S90301-E	$C6_A$modul 9 port 180°M GB3 pearl white
130B11SA0301-E	$C6_A$modul 12 port 180°M GB3 pearl white
130B20S50301-E	Subway underfloor unit GB2 Keystone 3 port unequipped pearl white
130B20S50601-E	Subway underfloor unit GB2 Keystone 6 port unequipped pearl white
130B20S50901-E	Subway underfloor unit GB2 Keystone 9 port unequipped pearl white
130B20S60301-E	Subway underfloor unit GB3 Keystone 3 port unequipped pearl white

© 2025 METZ CONNECT - Technische Änderungen vorbehalten! Subject to modifications! Sous réserve de modifications techniques!

P/N
1309380101-I
EAN 4250184106463
2025/09/17
Version: N

Accessories from

130B20S60601-E	Subway underfloor unit GB3 Keystone 6 port unequipped pearl white
130B20S60901-E	Subway underfloor unit GB3 Keystone 9 port unequipped pearl white
130B20S61201-E	Subway underfloor unit GB3 Keystone 12 port unequipped pearl white

© 2025 METZ CONNECT - Technische Änderungen vorbehalten! Subject to modifications! Sous réserve de modifications techniques!

P/N
1309380101-I
EAN 4250184106463
2025/09/17
Version: N

Illustrations

Dimensional drawing

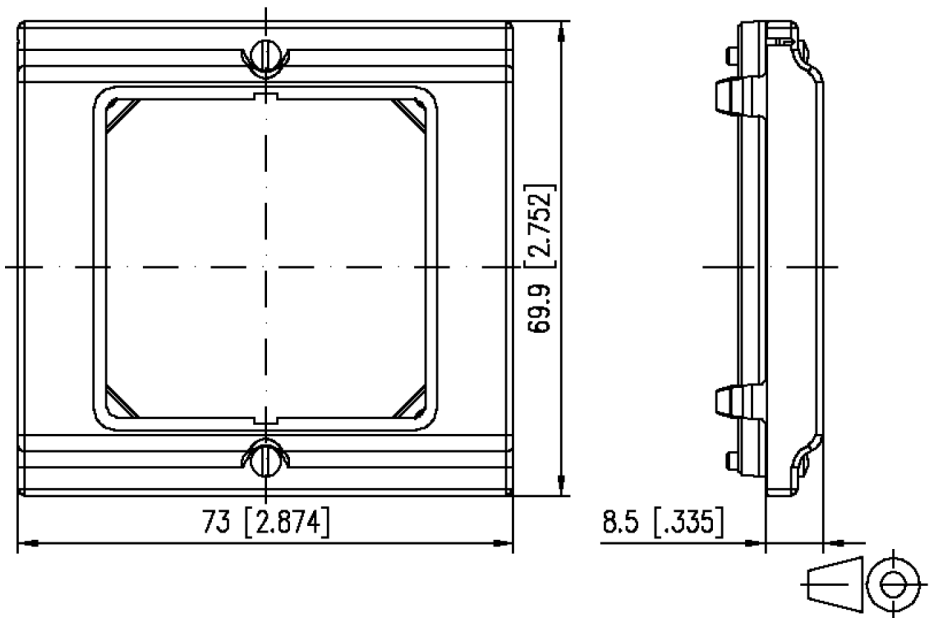

METZ CONNECT GmbH | Im Tal 2 | 78176 Blumberg | Germany
Phone +49 7702 533-0 | Fax +49 7702 533-433
Weitere Dokumentation siehe / additional documentation see / documentation supplémentaire voir www.metz-connect.com

© 2025 METZ CONNECT - Technische Änderungen vorbehalten! Subject to modifications! Sous réserve de modifications techniques!