Data sheet

Keystone wall outlet US-style 6 port unequipped

P/N
1309192402KE
EAN 4250184140894
2025/09/17
Version: V

Illustrations

Dimensional drawing

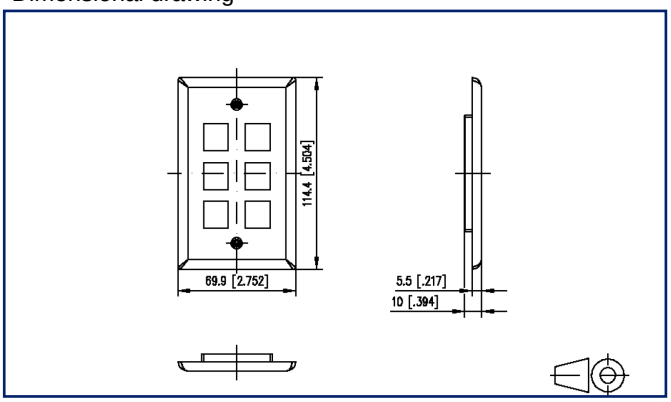

c UL US LISTED

See enlarged drawings at the end of document

Product specification

- flush-mounted termination unit for individual Keystone modules
- US style 70 x 115mm
- straight plug direction
- strain relief on module
- cover parts in color similar to pure white RAL 9010, glossy surface

- variants: 1 port, 2 port, 3 port, 4 port, 6 port

METZ CONNECT GmbH | Im Tal 2 | 78176 Blumberg | Germany
Phone +49 7702 533-0 | Fax +49 7702 533-433
Weitere Dokumentation siehe / additional documentation see / documentation supplémentaire voir www.metz-connect.com

© 2025 METZ CONNECT - Technische Änderungen vorbehalten! Subject to modifications! Sous réserve de modifications techniques!

Data sheet

Keystone wall outlet US-style 6 port unequipped

P/N
1309192402KE
EAN 4250184140894
2025/09/17
Version: V

Technical Data

General Data

Fields of application	structured building cabling office areas
Mechanical measurement according to MICE	M1
Ingress measurement according to MICE	I1
Climatic measurement according to MICE	C1
Electromagnetic measurement according to MICE	E3
Design	wall outlet
Mounting style	UP
Color	white
Dimensions	
Dimension (L x W x H)	69.9 mm x 10 mm x 114.4 mm
Dimension (L x W x H)	2.752 in. x 0.394 in. x 4.504 in.

Connections/interfaces

Number of ports interface 2	6

Materials and material properties

Material - Cover part(s)	ABS
Halogen free	yes

Approvals

UL listed (file no.)	c UL US LISTED	DUXR.E178484

Classifications

ETIM 7.0	EC001264
ETIM 8.0	EC001264
ETIM 9.0	EC001264
ETIM 10.0	EC001264

Packing details

Type of packaging	1 pc(s) / plastic bag

© 2025 METZ CONNECT - Technische Änderungen vorbehalten! Subject to modifications! Sous réserve de modifications techniques!

Keystone wall outlet US-style 6 port unequipped

P/N
1309192402KE
EAN 4250184140894
2025/09/17
Version: V

Technical Data

Application note

This product is a standard product of METZ CONNECT. METZ CONNECT is not aware of the specific intended use of the goods by the Customer or any customers of the Customer. The Customer guarantees that it has fully and sufficiently tested the use of the goods and any product modifications, product changes or product enhancements with regard to the specific intended use in accordance with the state of the art or in any other way. At METZ CONNECT's request, the Customer shall submit and make available meaningful evidence (e.g. test and laboratory protocols, certifications, etc.).

© 2025 METZ CONNECT - Technische Änderungen vorbehalten! Subject to modifications! Sous réserve de modifications techniques!

Keystone wall outlet US-style 6 port unequipped

P/N
1309192402KE
EAN 4250184140894
2025/09/17
Version: V

Illustrations

Dimensional drawing

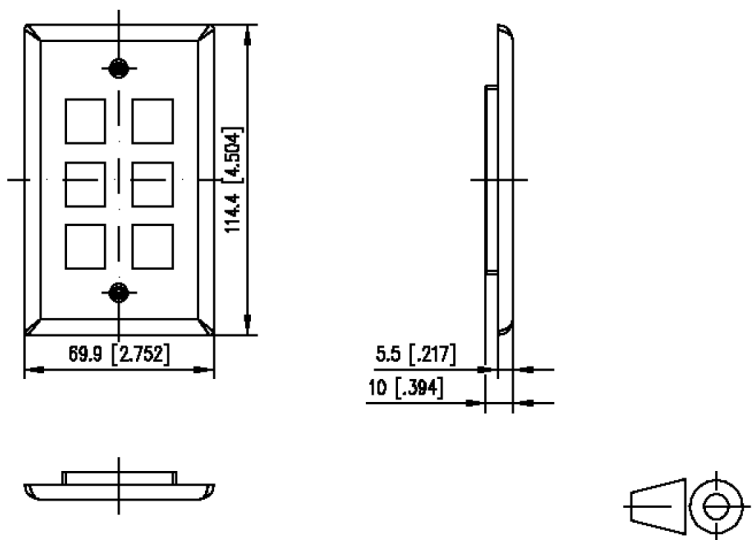

© 2025 METZ CONNECT - Technische Änderungen vorbehalten! Subject to modifications! Sous réserve de modifications techniques!