Data sheet

PR03302VBHC (Type 224), 2-pole

P/N 31224102

2026/11/13

Illustrations

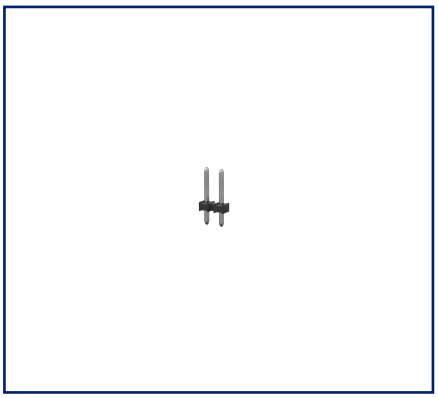

Dimensional drawing as an example

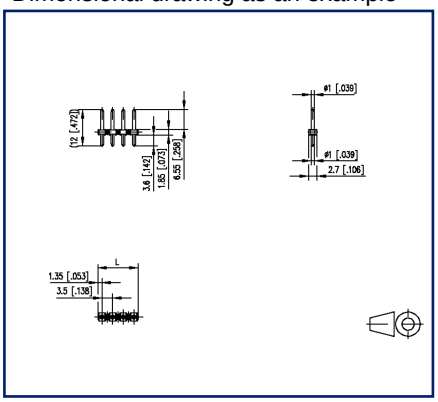

Drill pattern as an example

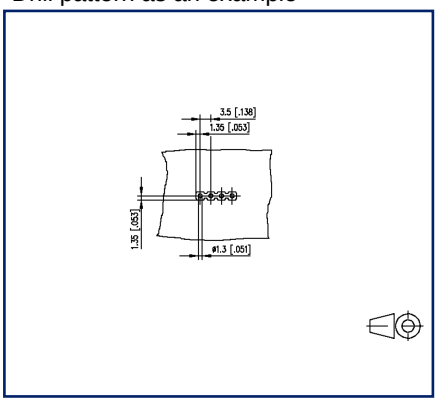

See enlarged drawings at the end of document

Product specification

- pin header, THR solderable
- centerline 3.50 mm, direction of connection vertical 0°
- fittable without loss of poles
- Tape & Reel packaging possible
- color black

© 2026 METZ CONNECT - Technische Änderungen vorbehalten! Subject to modifications! Sous réserve de modifications techniques!

METZ CONNECT GmbH | Im Tal 2 | 78176 Blumberg | Germany
Phone +49 7702 533-0 | Fax +49 7702 533-433 | info@metz-connect.com
Weitere Dokumentation siehe / additional documentation see / documentation supplémentaire voir www.metz-connect.com

Technical Data

General Data			
Solder pin length	3.6 mm		
pole size	2		
Insulating material class	CTI 600		
clearance/creepage dist.	2.5 mm		
Protection category	IP00		
Rated current	6 A		
Overvoltage category	III	III	II
Pollution degree	3	2	2
Rated voltage	200 V	500 V	500 V
Rated test voltage	4 kV	4 kV	4 kV
Approvals			
c UL us V / A	300 / 15		
approval UL - File No.	E121004		
SEV	200 V / 2.5 kV / 6 A / 1.0 mm		
Material			
insulating material	PA46		
flammability class	V0		
contact pin material	CuZnPb		
contact pin surface	Ni + Sn		
Glow-Wire Flammability GWFI	-		
Glow-Wire Flammability GWIT	-		
Climatic Data			
upper limit temperature	105 °C		
lower limit temperature	-40 °C		
general			
Tolerance	ISO 2768 -mH		
Solderability	reflowable		
Application note			

© 2026 METZ CONNECT - Technische Änderungen vorbehalten! Subject to modifications! Sous réserve de modifications techniques!

Technical Data

This product is a standard product of METZ CONNECT. METZ CONNECT is not aware of the specific intended use of the goods by the Customer or any customers of the Customer. The Customer guarantees that it has fully and sufficiently tested the use of the goods and any product modifications, product changes or product enhancements with regard to the specific intended use in accordance with the state of the art or in any other way.

© 2026 METZ CONNECT - Technische Änderungen vorbehalten! Subject to modifications! Sous réserve de modifications techniques!

Counterpart of

P/N	Designation
31166102	RP02302HBWC (Type 166), 2-pole
709004	Tape_224_2pol_24mm CT2273 CL5 22B3 L16 W24 Tape_224_24mm

© 2026 METZ CONNECT - Technische Änderungen vorbehalten! Subject to modifications! Sous réserve de modifications techniques!

Illustrations

Dimensional drawing as an example

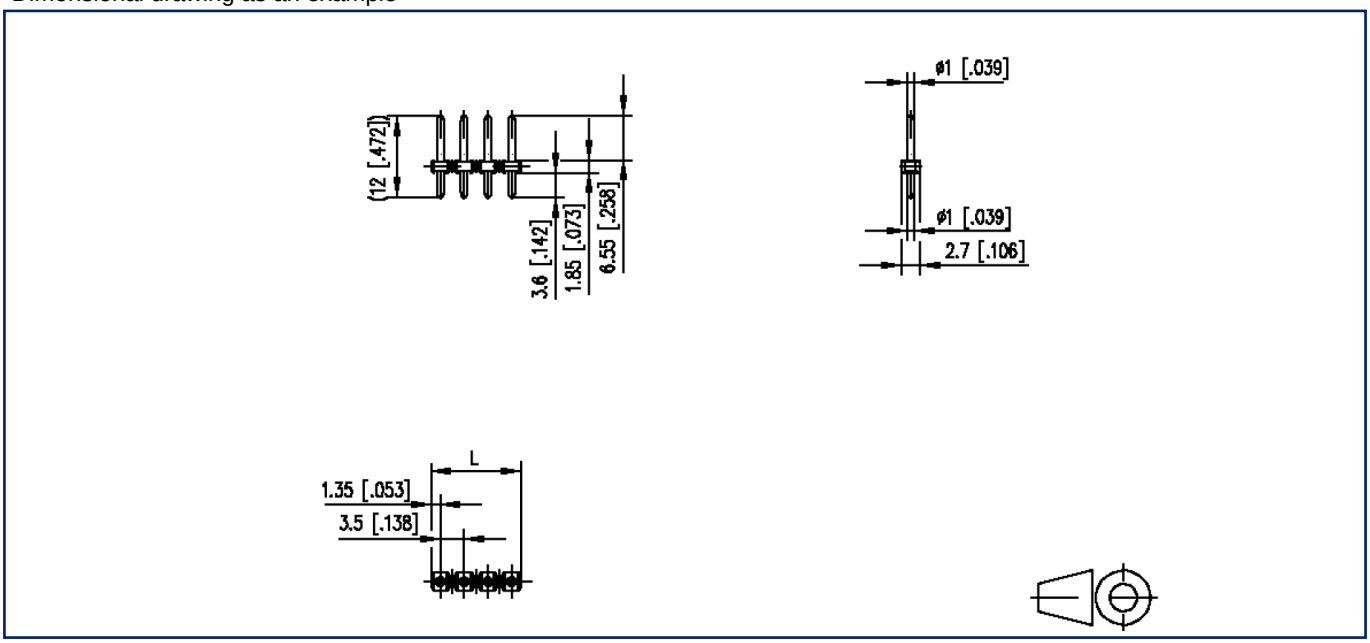

L=(pole size - 1) x centerline + 2.7 mm [0.106]

© 2026 METZ CONNECT - Technische Änderungen vorbehalten! Subject to modifications! Sous réserve de modifications techniques!

Illustrations

Drill pattern as an example

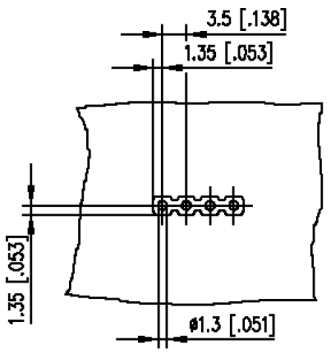

© 2026 METZ CONNECT - Technische Änderungen vorbehalten! Subject to modifications! Sous réserve de modifications techniques!